UNIVERSITY OF CANTERBURY
Te Whare Wānanga o Waitaha
CHRISTCHURCH NEW ZEALAND

Civil and Natural Resources Engineering

Research Report

Assessment of hollow-core floors for Seismic performance

Richard Fenwick, Des Bull and Debra Gardiner

2010–02

ISSN 1172-9511

10

ISSN 1172-9511

ASSESSMENT OF HOLLOW-CORE FLOORS FOR SEISMIC PERFORMANCE

By

Richard Fenwick, Des Bull and Debra Gardiner

Research Report 2010-02

Department of Civil and Natural Resource Engineering
University of Canterbury
Christchurch, New Zealand

Abstract

The objective in writing this report is to provide a guide to structural engineers on how to assess the potential seismic performance of existing hollow-core floors in buildings and the steps involved in the design of new floors.

Hollow-core units in New Zealand do not contain stirrups within the precast concrete section. This is due to the way that they are manufactured. The only reinforcement in the great majority of hollow-core units consists of pretensioned strands that are located close to the soffit. A consequence of this is that hollow-core units have a number of potential brittle failure modes that can occur when adverse structural actions are induced in the units. These adverse actions can be induced in a major earthquake due to the relative vertical, horizontal and rotational displacements that occur between hollow-core units and adjacent structural elements, such as beams or structural walls.

A number of large scale structural tests backed up by analytical research has shown that extensive interaction occurs between floors containing prestressed precast units and other structural elements, such as walls and beams. The constraint that prestressed units in a floor can apply to adjacent beams can result in an increase in strength of the beams to a considerably greater strength than that indicated in editions of the New Zealand Structural Concrete Standard published prior to 2006. The extent of this increase is such that it could in some cases result in the development of a non-ductile failure mechanism instead of the ductile failure mechanism assumed in the design.

Prestressed floor units tie the floor bays together leaving a weak section where the floor joins to supporting structural elements. The restraint provided by the prestress restricts the opening of cracks within the bay. In the event of an earthquake this restraint can result in wide cracks developing at some of the boundaries to floor bays. These cracks may have a significant influence on the performance of the floor when it acts as a diaphragm to transfer seismic forces to the lateral force resisting structural elements in the building.

The report contains details of;

1. The different failure modes, which may be induced in hollow-core floors, and the failure modes that may develop in a buildings due to the presence of hollow-core units in the floors;
2. Criteria that may be used to assess the magnitude of the design earthquake which may be safely resisted by a hollow-core floor in a building;
3. Details of how construction practice related to the use of hollow-core floors in New Zealand has changed over the last five decades. This highlights particular aspects that need to be considered in carrying out an assessment of existing hollow-core floors;
4. Information on how a new hollow-core floor may be designed to be consistent with the Earthquake Actions Standard, NZS1170.5: 2004 and the Structural Concrete Standard, NZS3101: 2006 (plus Amendment 2);
5. A review of the research findings relevant to the behaviour of New Zealand hollow-core floors under earthquake conditions. Research that was used to develop the assessment and design criteria is described together with details of how the different criteria were developed from this work.

The Authors

Richard Fenwick, BE (Hons), PhD, FIPENZ

Richard was the primary author of the report. However, while it was being written there was detailed consultation with the other two authors.

Richard had close to ten years practical experience working for a local body and two consulting engineering firms before he joined the staff in Civil Engineering at the University of Auckland where he spent 27 years before retiring. In 2002 he moved to Christchurch and in the last 8 years he has worked on a voluntary basis with a number of staff and students in the Department of Civil and Natural Resource Engineering at the University of Canterbury on a number of research projects. During this period he helped write the Earthquake Actions Standards, NZS1170.5 and the Structural Concrete Standard, NZS3101:2006.

Desmond Bull, ME(Civil), FIPENZ, CPEng

Des is a Technical Director of Holmes Consulting Group (HCG) and the Holcim Adjunct Professor in Concrete Design at the Department of Civil and Natural Resource Engineering at the University of Canterbury. His work for HCG involves the development of structural engineering services for the company, with an emphasis on concrete structures (commercial and bridges). His work at the University involves teaching advanced classes in structural design and in supervising post graduate research projects.

Des has been practising as a structural engineer for 30 years and he has been involved in teaching and research at the University of Canterbury for 17 years. For the last 12 years he has been actively involved in supervising research on the seismic performance of floors in multi-storey buildings. He was involved in the development of the Earthquake Actions Standard, NZS 1170.5 and the Structural Concrete Standard, NZS3101: 1995.

Debra Gardener, BE (First Hons)

Debra is a PhD student who is nearing the completion of her research project. Her research project involves an investigation of the internal forces in floors in multi-storey buildings when they act as diaphragms in major earthquakes. Debra received a Batchelor of Engineering degree, with First Class Honours, in 2008.

Appendix B in the report is based on an undergraduate research project carried out by Debra as part of her undergraduate studies and research in the topic of lateral forces for design of diaphragms, being an early part of her PhD studies.

Acknowledgements

This report would not have been written without the active support of the Department of Civil and Natural Resource Engineering. In particular the Department provided Richard Fenwick with office space, computing and library facilities and technical assistance from technicians, secretaries and academic members of staff.

The writers gratefully acknowledge the many useful and valuable suggestions made by Esli Forrest who read an early draft of several chapters of the report.

List of Figures

List of Tables

Chapter 1

Introduction to Report

1.1 Introduction

In writing this report the authors have attempted to summarise our current knowledge of the performance of hollow-core floors subjected to cyclic loading that is representative of actions that can be expected to occur in major earthquakes. On the basis of this knowledge an attempt has been made to identify the different ways in which structural failure may occur in buildings containing hollow-core floors. A method of assessing the potential seismic performance of existing buildings with hollow-core floors is described. A criterion is given for each potential failure mode associated with hollow-core floors subjected to seismic actions together with a method of for assessing wheen each criterion is just reached. As a measure of the potential seismic performance the magnitude of the earthquake response spectrum that can be sustained when the critical criterion is just reached is expressed as a proportion of the ultimate limit state design earthquake response spectrum which would have been used for the design of the buildings if current structural design standards had used. One chapter deals with the design of new hollow-core floors. The clauses of the Structural Concrete Standard (NZS3101: 2006), which should be addressed in the design of new hollow-core floors, are detailed and a number of other recommendations are given.

The design/assessment criteria in this report are based on the equivalent of the ultimate limit state as used in current (2010) structural standards. Serviceability conditions are not addressed. It should be noted that the ultimate limit in a correctly designed building is achieved with a high degree of safety against failure, see chapter 3. In setting up the design and assessment criteria for hollow-core floors described in this report an attempt has been made to maintain as far as possible a similar level of safety against failure. This is not easy due to the very limited structural testing and analytical work that has been carried out on the performance of hollow-core units and floors. In particular it should be noted that in assessing overseas research, or design practice, allowance must be made for differences in New Zealand practice and that used in Europe and else where in the world. These differences can make it difficult to interpret conclusions derived from research carried out over-seas in terms of New Zealand practice.

In developing design criteria in structural standards for flexure, shear, torsion, development of reinforcement etc many hundreds of tests on each aspect have been made and analysed to establish the equivalent of nominal member strengths. In design nominal strengths are based on lower characteristic material strengths and an allowance for the inherent scatter that occurs in member strengths after the variation in material strengths is removed from the test results. However, with hollow-core units very few tests have been made and in many of these the material strengths have not been measured. Furthermore the number of tests is in all cases insufficient to establish the inherent strength variability that occurs in concrete elements which have some brittle characteristics. It is hoped that future testing will enable the design/assessment criteria to be established with improved precision.

1.2 Contents of report

Chapter 2 contains a brief history of the use of hollow-core flooring in New Zealand. Differences that have occurred in practice over the last few decades with that which is recommended in our current (2010) structural standards are identified. An appendix to this chapter gives details of some of the hollow-core sections that have been used in the past or are in use at present.

Chapter 3 details different structural actions and material characteristics that need to be considered in carrying out a design or assessment of a hollow-core floor in a building. This includes;

- discussion on the minimum acceptable level of seismic performance of a floor,
- the significance of the design displacement, which is less than the anticipated peak displacement in the design level earthquake,
- the importance of elongation in plastic hinges in concrete structures and design values derived from tests,
- the significance of vertical seismic ground motion on performance of hollow-core floors,
- background on the ultimate limit state and how this relates to typical test results,
- the variability of tensile strength of concrete and the significance this has in interpreting the results of tests.

Chapter 4 describes how to interpret the magnitude of earthquake that would be sustained when a critical condition is reached in a hollow-core floor as a proportion of the earthquake actions that would be applied if the building had been designed using current structural standards. An assessment may be made from existing design calculations or from a new analysis of the structure. In making an assessment from an existing set of design calculations allowance has to be made for changes in design practice, for example the way in which section properties were assessed etc. Examples are given of assessments made from both existing sets of calculations and from new analyses of the structure made specifically as part of the assessment.

Chapter 5 gives an over-view of potential failure modes of hollow-core floors. Details are given of recommended practice in the design and detailing of support zones for hollow-core floors and these are compared with previous practice. Brief notes are given on the possible adverse consequences of previous practice where this practice has been changed. This is intended to assist a structural engineer involved in assessing an existing building to identify critical aspects that need to be addressed. The different failure mechanisms which have been observed in tests or predicted on the basis of theoretical calculations are outlined.

Chapter 6 gives the limiting criteria for each potential failure mode. Examples are given showing how these criteria can be related to critical inter-storey drifts. The critical limiting drifts can then be used to assess the magnitude of the earthquake which would induce the critical action as described in chapter 4.

Chapter 7 deals with the design of new hollow-core floors. This ranges from the factors which should be considered in selecting a particular type of precast floor to a detailed list of requirements contained in the 2006 Structural Concrete Standard together with some aspects that should be considered in assessing the performance of floors under fire conditions.

Appendix A contains detailed information of the way in which the different assessment criteria were developed from the results of research work. As such it provides a summary of previous research relevant to hollow-core floors in New Zealand and it also gives an indication of the reliability each of each assessment criterion given chapter 6 and the design criteria for new floors given in Chapter 7.

Appendix B gives a method of assessing the diaphragm actions which need to be considered in the design of a new floor or assessment of an existing floor in a multi-storey building.

To simplify the use of this report chapters 5, 6, 7 and Appendix A have been written as far as practical as stand alone chapters. This involves some repetition of material to prevent extensive cross referencing. The writers hope this makes the report easier to use for structural engineers involved in assessing existing hollow-core floors or designing new floors.

Chapter 2

Hollow-core units and construction practice for hollow-core floors

2.1 Introduction

The information contained in this section, which relates to previous practice in construction of hollow-core floors, was obtained from discussions with structural engineers and from the "Preliminary Draft – Seismic Performance of Hollow Core Floor Systems" report [1], which was produced by a committee (PCFOG) established by SESOC, NZCS, NZSEE and the DBH. For additional details on the history of production of hollow-core units, details of hollow-core units and the way in which they were installed by the industry, readers are referred to the draft report above or the final draft of the PCFOG report when this becomes available.

2.2 Hollow-core units

Hollow-core units used in buildings are manufactured on long pretension beds. The units are cast in a long length and then cut into the required lengths when the concrete has obtained sufficient strength. The hollow-core units are designed by the manufacturer for the loading nominated by the design engineer in the supply contract. In particular the amount of pretensioned reinforcement in any particular hollow-core unit is proportioned to satisfy the required strength for the designated loading in the specification and the stiffness and minimum reinforcement requirements in the **then** current structural design standards. Design tables have been produced by manufacturers giving design live load capacities for different spans for units which contain the maximum possible amount of pretensioned reinforcement. However, in practice only in a few cases will the units contain the maximum amount of pretensioned reinforcement. Hence in assessing a floor it is important to understand that the units may have a considerable lower flexural strength than that indicated in the technical literature describing the units. The only safe assumption is to assume the units have the necessary design strength for the design loading nominated in the supply contract.

The first hollow-core units in New Zealand were manufactured in the late 1960s by casting concrete round voids formed by circular cardboard or rubber tubes, or with voids formed with polystyrene. The webs in these units were reinforced with ¼ inch (6mm) stirrups and they were reinforced for flexure with pretensioned strands.

In 1974 the first Dycore hollow-core extruding machine was introduced into New Zealand and from this date the production of hollow-core units by extruding machines dominated the market. With this method of production as the machine moves along the pretension bed a zero slump concrete is extruded at high pressure through formers and it is compacted by vibration to form the required section shape. Some relatively minor variation in section dimensions can occur due to settlement of the concrete during the extrusion process and to wear of the formers.

Over the last four decades a number of different extrusion machines have been used for the production of hollow-core units in New Zealand. In all cases with these machines it is not possible to include shear reinforcement in the webs of the units and consequently the shear strength is dependant on the shear that can be safely resisted by concrete alone unless additional stirrup and longitudinal reinforcement is added between hollow-core units or in broken out cells. It should be noted that such reinforcement for shear, though commonly used, will not necessarily be 100% effective in all cases. The provisions in the Structural Concrete Standard (NZS3101: :2006 Clause 7.5.7) require stirrups to be anchored around and enclose the flexural tension reinforcement, which in this case are the pretensioned strands and this cannot be achieved as reinforcement transverse to the pretensioned strands cannot be placed in hollow-core units.

Appendix 2A, which is located at the end of this chapter, shows a few of the different section profiles that have been produced. Additional information may be obtained from reference [1].

Concrete strength used in the production of hollow-core units is dictated by the requirement that the units gain sufficient strength to enable them to be cut into the required lengths within a short period so that efficient use to be made of the production facilities. A number of test cores cut from hollow-core units, which have been supplied to the University of Canterbury, have indicated concrete strengths are in the range of 50 to 90MPa.

In New Zealand generally top strands have not been used in hollow-core units. This practice differs from that in Europe as noted else where, see 2.4.

Hollow-core units used in bridge construction differ from those used for floors in buildings. Due to the high point wheel and axial loads bridge hollow-core units need to contain both shear reinforcement in the webs and transverse reinforcement in the soffit region below the voids. Such units in New Zealand are not produced by the extrusion process described above.

2.3 Construction details

2.3.1 Topping concrete and propping of precast units

The minimum topping thickness is usually quoted as 65mm, but more commonly 75mm or more is used to accommodate reinforcement in the insitu concrete and provide adequate an cover dimension. There are three functions of the topping concrete:

1. To take up small differences in the deflected profile between the precast units in the span so that a plane floor surface can be produced;
2. To tie the floor together to help distribute structural actions associated with concentrated loads and to enable the floor to act as a diaphragm to transfer lateral forces to the lateral force resisting elements in the building;
3. The addition of the insitu concrete acts compositely with the precast concrete to increase both the strength and stiffness of the floor.

The precast units provide a good working surface for laying reinforcement and casting the topping concrete. Generally the units are not propped in their mid span regions for the addition of the insitu concrete. Some gain can be obtained in serviceability performance by propping the units before the insitu concrete topping is added. However, the gain is not great due to the differential shrinkage and creep of the insitu concrete relative to the hollow-core units.

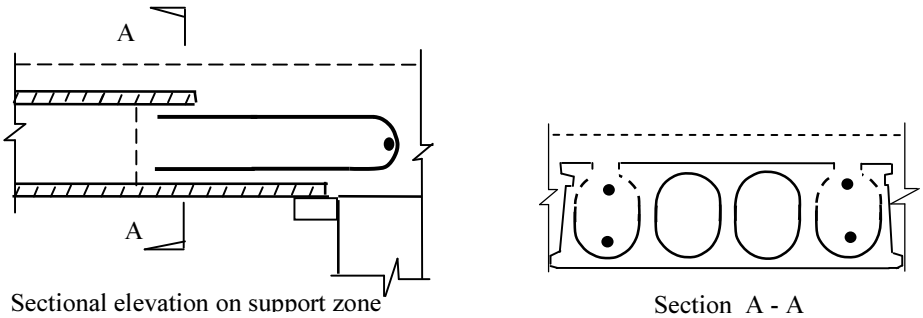

Figure 2-1: Detail used where hollow-core units are too short for span

Temporary propping has been used near supports where the integrity of the support zone is judged inadequate until the insitu concrete has gained strength. The arrangement illustrated in

Figure 2-1 has been used in the past where precast units have been found to have inadequate length to provide adequate overlap on the support ledges due to construction error or some other cause. In such cases a temporary prop has been used at one end and two or more cells are broken out, reinforced with a hairpin shaped, or similar shaped bar, and then filled with insitu concrete. The current recommendation is that where this detail is used the hairpin shaped bar should be replaced by 16mm Grade 300 plain round bars, which is anchored by hooks at each end. Single bars are placed in the bottoms of two cells at the end of the unit being considered (see NZS3101: 2006 clause C18.6.7). The reasons for the change in recommended detail are given section 6.5.

2.3.2 Reinforcement in topping concrete

Generally in the past the topping concrete has been reinforced using 665 mesh placed directly above the precast units. Starter bars, 10 or 12mm in diameter, generally lapped the mesh and provide continuity to supporting and adjacent structural elements. These bars generally extended to between 400mm to 1,500mm into the suspended slab [18]. In a full scale test of a floor it was found that the mesh failed where it crossed a crack in the floor. For this reason the use of non-ductile mesh is no longer permitted (NZS3101: 2006, Clause 5.3.2). It is recommended that reinforcement in topping concrete should be provided by Grade E deformed bars. The use of ductile mesh is not prohibited by the Standard but it is not recommended for the reasons detailed in Section 7.3.

2.3.3 Support details

When hollow-core units were first introduced the Ministry of Works required the units used in Public buildings to be mounted on mortar on support ledges [2]. This practice was used by some consultants for many years. However, to avoid difficulties in disturbing the mortar when the units were moved into place it became common practice to mount the precast units direct on concrete, structural steel members or masonry walls, and rely on the insitu cast round the ends of the units to take up any gaps below the webs and provide continuous support. It is now accepted that hollow-core units should be supported on low friction bearing strips to reduce potential spalling of concrete and the tendency to develop a positive moment failure crack close to the face of the support (see Section 6.5).

In the 1970s and 1980s the seating of hollow-core units generally followed North American practice with the exception that the low friction bearing strip was not generally used. Specified support lengths were down to 50mm, with this support in some cases being on cover concrete. In a number of cases to facilitate placing the hollow-core units in restricted gaps between shear reinforcement in the supporting beams the units were constructed short and mounted with one end with the required overlap and propped at the other end with the detail shown in Figure 2-1 being used to extend it into the support ledge. The direct ledge support to the units was alternated end for end to reduce any potential loss in strength [3].

The 1995 edition of NZS3101 introduced minimum requirements for support lengths for precast floor units and these were further increased in 2004 with an amendment to this Standard. This amendment also required low friction bearing strips to be used. These strips were found to reduce spalling associated with creep, shrinkage and thermal movements of the hollow-core units on their supports and with sway associated with wind or earthquake actions.

The reinforcement used in the broken out cells was calculated either on the basis of shear friction, which would have been ineffective when the crack width exceed a value of the order of 1 to 2 mm, or on the basis of kinking mechanism proposed by Hawkins and Mitchell [4], as illustrated in reference [3]. However, it should be noted that the kinking mechanism only works when the support zone has failed and the precast unit has dropped by the order of a bar diameter or more.

This mechanism was not intended by Hawkins and others as a design method for a support but as a method of preventing complete collapse in the event of a failure at a support. It should be noted that reinforcement located in topping concrete is ineffective in providing kinking support. Hawkins and Mitchell found that such reinforcement was pulled out of solid concrete slabs when a shear failure occurred. In New Zealand tests have shown that the kinking force applied by these bars pulls the insitu concrete topping off the precast units allowing collapse to occur [5].

The detail shown in Figure 2-1 was tested by Herlihy [6] and by Works Central Laboratories [7] and found to be adequate. However, in both cases the relative rotations appropriate to the anticipated magnitudes of movement of the units over the support ledges were not applied. Subsequent tests carried out by Jensen [4] indicated that where bars are kinked the local bending in the bars reduces the elongation that can be sustained before fracture occurs. As previously noted using the hairpin or paper clip shaped, bars shown in Figure 2-1, can have an adverse influence on the negative moment flexural and shear strengths, see Section 6.6. A different arrangement is now recommended, see *NZS3101: 2006,* C18.6.7.

2.4 Research on hollow-core floors in New Zealand

Research findings from overseas were used to develop design criteria for hollow-core units produced in New Zealand. Research in New Zealand concentrated on the behaviour of hollow-core floors in buildings subjected to simulated seismic loading. Of particular concern was the interaction that hollow-core floors would have with other structural elements.

In the late 1970s and early 1980s several series of tests were made on reinforced concrete rectangular and Tee beams under inelastic cyclic loading at the University of Auckland (see chapter 3). It was found that even when appreciable axial compression loads were applied to the beams the plastic hinge regions elongated [8]. This gave rise to the concern that elongation occurring in beams could push transverse beams apart, possible resulting in premature collapse of precast units which were supported by these beams. It was not until similar elongation measurements were made at Canterbury University in the late 1980s and early 1990s that the industry started to take the problem seriously [9, 10].

The concern for the effects of elongation led to three research projects at the University of Canterbury. In these projects individual precast units with reinforced topping concrete were cast onto a block of concrete, which was rigidly held to a strong floor. The units were pulled out from the concrete beam to represent the action of elongation. A number of different reinforcement arrangements were investigated and in particular the paper clip and hairpin shaped bars in filled cells, similar to that illustrated in Figure 2.1, were investigated [11, 12, 6]. In these tests only nominal rotation was applied to the hollow-core unit relative to the supporting block of concrete. Subsequent tests showed that when tests were carried out applying both elongation and an appropriate magnitude of rotation appreciably greater spalling occurred from both the front ledge and back face of the hollow-core unit than was seen in the earlier tests [13, 5]

A large scale test of a hollow-core floor with an associated ductile moment resisting frame was carried out by Matthews [14]. The hollow-core units were mounted on mortar on cover concrete to represent practice which was used by some designers in New Zealand in the 1980s. It was found that positive moment cracks developed close to the supports at drift levels below that required to initiate yielding of reinforcement in the beams. As the test progressed excessive cracking developed in the webs of the hollow core unit located next to the beams in the moment resisting frame. The positive moment cracks together with the web cracking, which was induced by differential vertical deflection between the hollow-core floor and the adjacent beams, led to the premature collapse of the floor.

A series of individual tests of hollow-core units with insitu concrete topping mounted on a concrete block were made to see if the conditions observed in the Matthews' test were reproduced in individual unit tests. It was found that the same positive moment crack developed, opened up under cyclic loading and led to failure. Incorporating a paper clip shaped reinforcement in two broken out cells and mounting the hollow-core unit on a low friction bearing strip was found to greatly improved the performance [13].

Different support details were examined in large scale tests carried out by Lindsay and McPherson [15, 16]. This work led to the recommendations contained in the commentary to NZS 3101: 2006, clause C18.7.4. At the same time the requirement to provide a flexible link between hollow-core units and adjacent structural elements was introduced. This enables any differential vertical displacement that may develop between a hollow-core unit and other structural elements to be accommodated without the force transfer between the two causing the webs in the hollow-core unit to crack excessively (NZS3101; 2006, clause 18.6.7.2).

Further research by Liew and Woods [17, 18] highlighted the potential problem of flexural and shear strengths in negative moment zones close to supports. Experimental and theoretical work showed that elongation of plastic hinges and relative rotation of hollow-core units from their supports can induce negative moments near to supports. This action was shown to lead to a brittle flexural failure in two tests and theoretical work indicated that it can also result in a significant loss of shear strength [18]. This research is reflected in a number of clauses in NZS3101; 2006 with amendment 2.

Research on the behaviour and design of diaphragms is continuing at the University of Canterbury. Appendix A and chapters 3 and 6 contain additional information on research findings relevant for hollow-core floors

2.5 European practice in construction of hollow-core floors

Practice in New Zealand has diverged from European practice in a number of aspects as noted below [19];

- In New Zealand it is unusual to have top strands in the hollow-core units, but they appear to be generally present in European practice except in the thinner units;
- Negative moment continuity reinforcement is placed in broken out ducts at the end of members at approximately the same level as the top pretension strands in the hollow-core units. No reliance is places on negative moment reinforcement in topping concrete;
- Positive moment continuity reinforcement is placed in broken out ducts at the end of members at close to the same level as the bottom strands;
- Generally European practice appears to rely on somewhat greater width of the support ledges than that used in New Zealand.

There are a number of structural advantages that are obtained by the use of top strands and placing the continuity reinforcement in the broken out cells. Firstly the strands increase the negative moment flexural strength and this reduces the need for ductile reinforcement in the topping concrete. Secondly, the top strands make little difference to the positive moment flexural strength but they reduce the effective eccentricity of the prestress and hence reduce deflections due to prestress and creep of concrete. This should improve deflection control of the hollow-core units both before and after installation into a floor. Thirdly as the negative moment continuity reinforcement is in the ducts the strength no longer depends on composite action between the topping concrete and precast concrete. As noted in tests often the precast and insitu concretes have been observed to delaminate, which can make the negative moment continuity reinforcement in the topping concrete ineffective. In one or two cases it was concluded that

delamination of insitu concrete from the precast unit contributed to a brittle negative moment failure (see Appendix A, sections A3.2.2 & A3.2.3, and [6, 13]. Fourthly, a number of positive moment failures near supports have been observed in tests in New Zealand [12, 13]. The use positive moment continuity reinforcement, which laps the pretension strands over their transfer length, greatly reduces the likely hood of this type of premature failure. Finally the top pretension strands increase the shear strength of the hollow-core units in the negative moment zone.

References

1 PCFOG committee "Preliminary Draft – Seismic Performance of Hollow Core Floor Systems", published by DBH April 2009

2 Ministry of Works*, 1970, Design of Public Buildings, Code of Practice, PW 81/10/01*, Wellington

3 NZCS and NZSEE, Editions 1991 and 1999, *Guidelines for the Use of Structural Precast Concrete in Buildings,* NZ Concrete Society, NZ Society for Earthquake Engineering, and Centre for Advanced Engineering, University of Canterbury.

4 Hawkins N M and Mitchell, D. 1979, *Progressive collapse of flat plate structures" Journal of American Concrete Institute, Vol. 76, No. 7, pp775-808*

5 Jensen, J., 2006, "*Experimental investigation of Existing Hollow-core Seating Connections pre and post Retrofit",* ME Thesis, Civil and natural Resource Engineering, University of Canterbury

6 Herlihy, M D. and Park, R., 2000, P*recast Concrete Floor Support and Diaphragm Action,* Research Report 2000-13, Department of Civil Engineering, University of Canterbury, Christchurch, New Zealand.

7 Blades PS, Jacks DH, Beattie GJ, 1990. *Investigation of the Influence of the End Support Condition on the Shear Strength of Prestressed Voided Slabs*, Works Consultancy Services Central Laboratories Report 90-25115. 8.

8 Fenwick, R.C., "Member Elongation, A Neglected Factor in Seismic Design", N.Z. Concrete Society Technical Report No. TR10, 1990, pp 89-94.

9 Cheung, P C, Paulay, T, and Park R, 1991, *Seismic design of reinforced concrete beam-column joints with slabs,* Research Report, 91-4, Civil Engineering, University of Canterbury

10 Restrepo-Posado J I, 1993, *Seismic behaviour of connections between precast concrete elements*, Research report 93-3, Civil Engineering, University of Canterbury

11 Mejia-McMaster JC, Park R, 1994. *Precast Concrete Hollow Core Floor Unit Support and Continuity. Research Report 94-4*, Department of Civil Engineering, University of Canterbury.

12 Oliver S J., 1998, *The Performance of Concrete Topped Precast Hollow-core Flooring Systems Reinforced with and with and without Dramix Steel Fibres under Simulated Seismic Loading,* Master of Engineering Thesis, Department of Civil Engineering, University of Canterbury

13 Bull, D K and Matthews, J G., 2003, "P*roof of Concept Tests for Hollow-core Floor Unit Connections*", Commercial Report, C2003-1, Civil Engineering, University of Canterbury

14 Matthews, J., 2004, *Hollow-core floor slab performance following a severe earthquake*, PhD thesis, Civil Engineering, University of Canterbury

15 Lindsay R, 2004. *Experiments on the Seismic Performance of Hollow-core Floor Systems in Precast Concrete Buildings*. ME thesis, Civil Engineering, University of Canterbury.

16 MacPherson C, 2005. *Seismic Performance and Forensic Analysis of Precast Concrete Hollow-core Floor Super-assemblage*. ME thesis, Civil Engineering, University of Canterbury.

17 Liew, H Y, 2004, *Performance of hollow-core seating connection details*, ME thesis, Civil Engineering, University of Canterbury

18 Woods, L J, 2008, *The Significance of Negative Bending Moments in the Seismic Performance of Hollow-core Flooring*, ME Thesis, Civil Engineering University of Canterbury

19 FIB, 2000, *Special Design Considerations for Precast Prestressed Hollow-core Floors*, Commission for Prefabrication, Published by International Federation for Structural Concrete (fib).

Appendix 2A
Hollow-core sections and properties produced by Stahlton and Stresscrete

The material in this appendix has been copied form “Stahlton Technical Information”, which was obtained in 2009.

Stahlton Hollow-core Sections

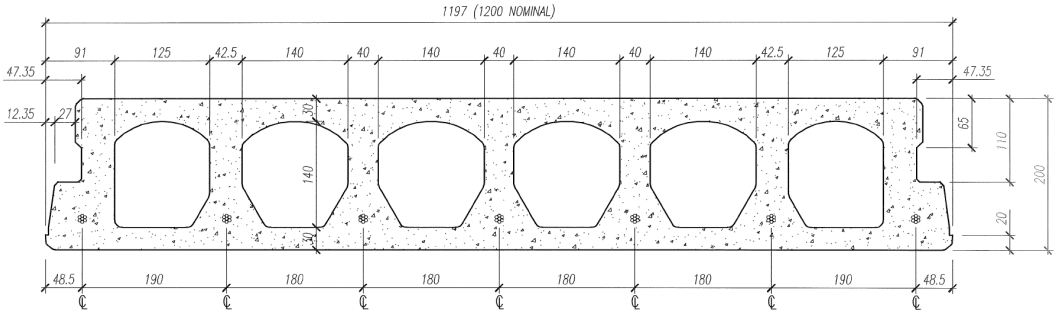

200 CORSLAB

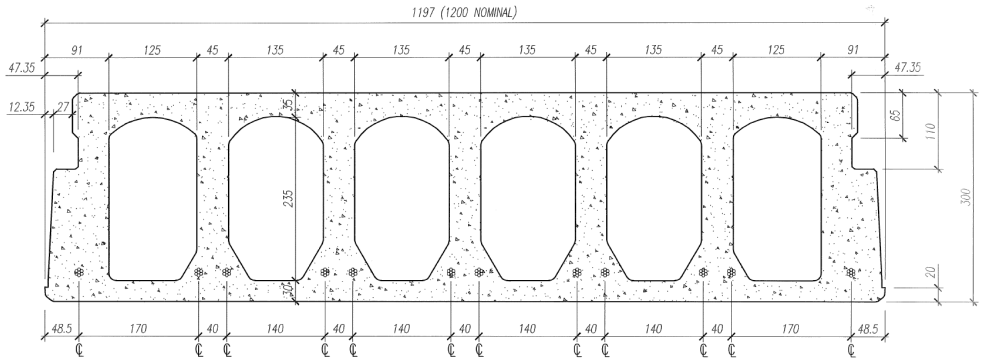

300 CORSLAB

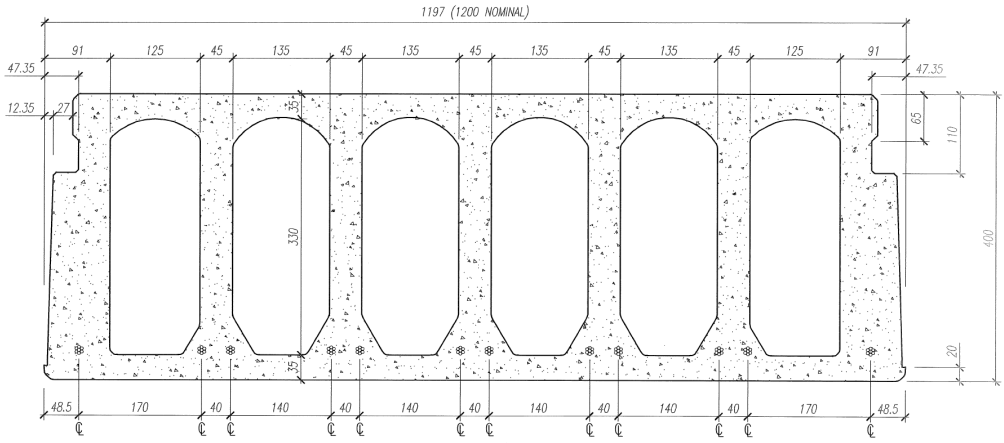

400 CORSLAB

Corslab Load Span Table

Units ex Auckland

Unit Size (mm)	Self Weight (kPa)	Clear spans in metres. Maximum superimposed (unfactored) loads in kPa. Based on 65 topping. 8m	9m	10m	11m	12m	13m	14m	15m	16m	17m	18m	19m
200	4.2	9.0	6.5	4.5	3.0								
300	5.3			15	11.5	9.0	7.0	5.5	4.0				
400	6.2								8.5	7.0	5.5	4.5	3.5

Note:
Spans to the left of the solid line are the maximum recommended for typical use unless special measures are taken, such as developing continuity over supports. Temporary propping may also be required.
Where the floor soffit is to be left exposed, the natural variations in precamber may be reduced by using temporary propping for longer spans: 200 mm units - spans over 8.5 m, 300 mm units - spans over 13 m, 400 mm units - spans over 17 m.
This propping can normally be placed after the units are in position, and removed 5 days after the topping is cast.
200 mm Corslab units are not suitable for supporting heavy truck loads.

Weights for Handling: 200 mm - 350 kg/lin m 300 mm - 450 kg/lin m 400 mm - 550 kg/lin m

Corslab with Timber Infill Load Span Table

Units ex Auckland, using 800 spacing for a 2000 module

Unit Size (mm)	Self Weight (kPa)	Clear spans in metres. Maximum superimposed (unfactored) loads in kPa. Based on 65 mm topping over Corslab and 130 mm over timber. 7m	8m	9m	10m	11m	12m	13m	14m	15m	16m	17m	18m
200 CS 800 Ti	4.0	7.5	5.0	3.5	2.5								
300 CS 800 Ti	4.6			12.0	9.0	6.5	5.0	3.5					
400 CS 800 Ti	5.5						9.5	7.5	6.0	5.0	3.5	3.0	2.0

Note:
Spacing the Corslab units apart with timber infills can produce lighter and more economical floors with considerable benefits for some applications.
Stahlton Corslab series floors have been modified to produce 55 STC ratings between floors when used with timber infills.
The use of deep rebates enables 40 mm timber infills to be placed between the units to safely span 800 mm while achieving 130 mm concrete over the infills when using 65 mm over the Corslab units.
The superior sound transmission rating enables the floor to meet the requirements for apartment buildings and quality office accommodation without relying on expensive ceiling insulation systems which may be compromised by penetrations.
Closer spacing permits higher loads.
Temporary propping may be required when the units are spaced apart.

Stahlton Prestressed Concrete: 59 Airdrie Road, Ranui, Auckland, New Zealand
PO Box 21 124, Henderson, Auckland 1231, New Zealand Phone 09 831 0107 Fax 09 833 4408
info@stahlton.co.nz www.stahlton.co.nz Stahlton Prestressed Concrete is a Division of Fulton Hogan Ltd

Stresscrete Hollow-core Sections

The information for stresscrete hollow-core sections has been copied form Technical Information Sheets which were obtained from Stresscrete in the late 1990s.

SECTION PROPERTIES

UNIT	AREA m^2	Yb mm	I m^4	SELF WEIGHT kPa	HANDLING WEIGHT kg/m
200 DYCORE/PARTEK	.1192	100	$6.5x10^{-4}$	2.40	310
200 STRESSCORE	.1264	99	$6.29X10^{-4}$	2.60	330
250 STRESSCORE	.1336	125	$1.123X10^{-3}$	2.80	350
300 DYCORE/PARTEK	.1606	153	$2.04X10^{-3}$	3.20	420
300 STRESSCORE	.1718	145	$1.99X10^{-3}$	3.60	450
400 PARTEK	.2079	203	$4.194x10^{-3}$	4.26	515

DESIGN NOTES

FIRE RESISTANCE

Standard fire resistance ratings of slabs in the load span tables is 2 hours. Fire resistance ratings are unrestrained ratings and are based on minimum strand cover and equivalent concrete thickness requirements.

SHEAR CAPACITY

The shear capacity of extruded floor slabs is adequate for the uniformly distributed loads given in the load span graphs. Concentrated loads near supports may result in high shear or strand bond stresses. Please consult your local Firth Stresscrete Team. Extruded slabs are not recommended for highway loadings, in truck docks or similar areas with high shear loads.

ERECTION & CONSTRUCTION

PRELIMINARY

Before manufacture and delivery of units confirm all dimensions. Check the hollowcore layout drawings and confirm with actual site dimensions.

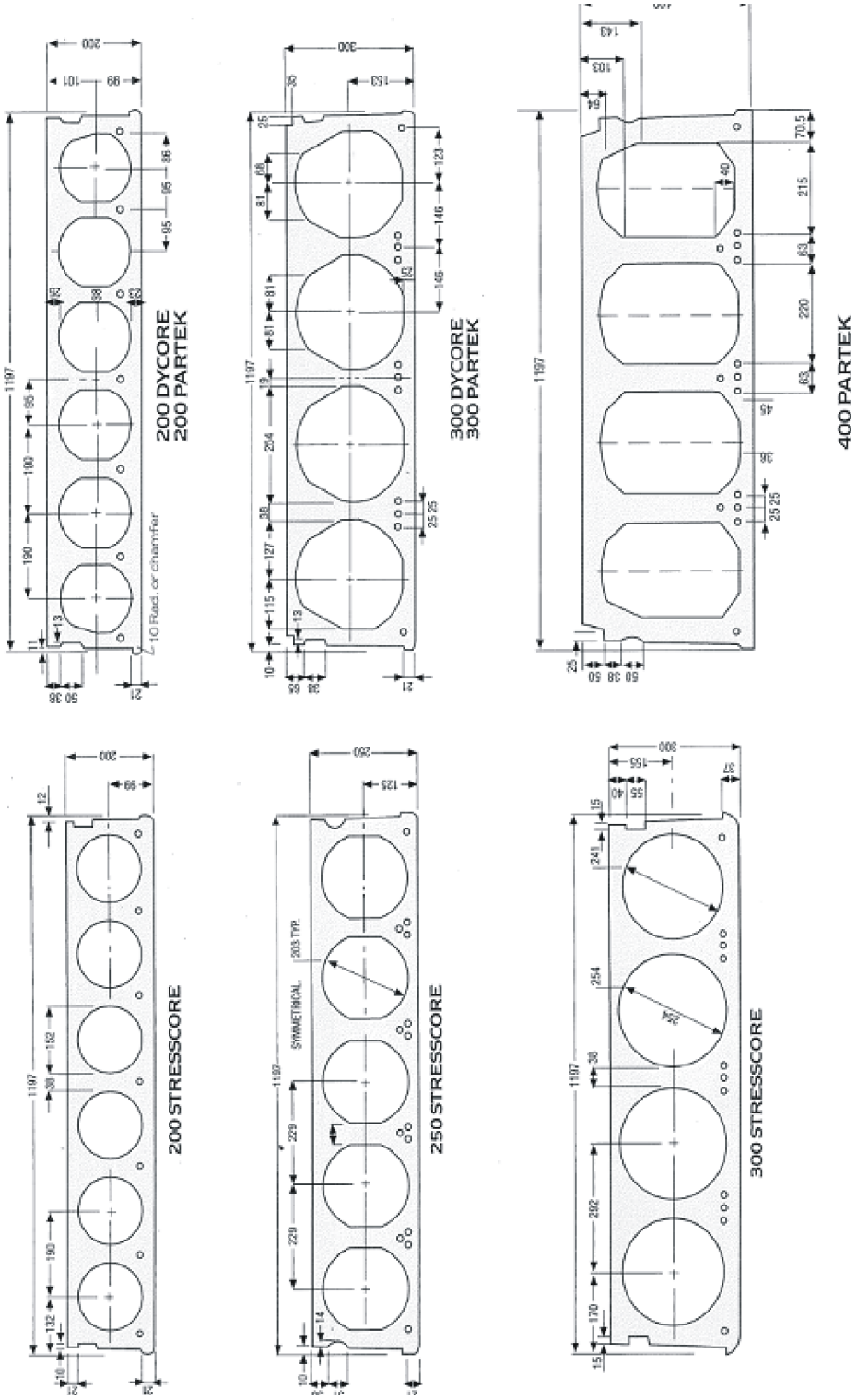
200 DYCORE
200 PARTEK
300 DYCORE
300 PARTEK
400 PARTEK
200 STRESSCORE
250 STRESSCORE
300 STRESSCORE
SYMMETRICAL
203 TYP.

Chapter 3

Factors that need to be considered in assessing hollow-core floors

3.1 Introduction

This section contains;

1. Discussion of factors which should be considered in assessing the minimum acceptable level of seismic performance;
2. Method of assessing seismic actions associated with design or retrofit of hollow-core floors with worked examples;
3. Factors which need to be considered in a design or assessment of a hollow-core floor;
4. Basis of assessment criteria in relationship to NZ Structural Standards;
5. Relationship of elongation of plastic hinges to plastic hinge rotation;
6. Seismic actions induced by vertical ground motion;
7. The significance of tensile strength of concrete in design particularly where the strength of units have been assessed on the basis of structural tests.

3.2 Minimum requirement for hollow-core floors

In making an assessment of buildings it is important to recognise that there is an inherent difference in the performance and integrity of precast flooring systems and traditional cast-in-situ concrete floors. The precast floors with cast-in-situ concrete topping are not as robust or tolerant to racking movements under earthquake actions as cast-in-situ floors. In establishing the minimum acceptable performance of precast floors it is essential to consider the consequences of failure. In multi-storey buildings that are adequately tied together, which is the case of most New Zealand buildings constructed in the last 3 decades, the formation of a column sway mechanism is likely to result in the destruction of one storey with a significant loss of life in that storey. However, serious injury and loss of life in other storeys is unlikely to be high. In contrast, the failure of an upper level floor is likely to result in the progressive collapse of all the floors below that level. In this case the loss of life would potentially be very high. The consequence of such a failure in a multi-storey building can be considerably greater than that of other structural elements in the building and hence the minimum retrofit level for precast floors should be higher than that for other structural members.

Given the potentially serious consequences of a collapse, where buildings is to be retrofitted to a minimum level such as one 1/3 of current Standards (33%NBS), it is recommended that the floors are retrofitted to a level appreciably higher than the 1/3 level. A retrofitted frame or wall to 33%NBS (New Building Standards) is likely to be capable of transmitting seismic actions appreciable above the 1/3 level to individual floors, which might result in failure of the floor retrofitted to a similar level for seismic resistance.

In the Earthquake Actions Standard (NZS1170.5) an earthquake with a return period of 2,500 years is assumed to have a displacement demand of 1.8 times the corresponding 500 year return earthquake. In NZS 3101: 2006 this value has been reduced to a factor of 1.5. This reduction is shown in Figure 3-1 and the logic behind the change is illustrated in Figure 3-2. In analyses on which the 1.8 coefficient was based it was assumed that the effective flange width, and hence effective area of flexural tension reinforcement, was constant with increasing displacement. Consequently it was assumed that any increase in strength was primarily due to strain hardening of the flexural tension reinforcement. However, as shown in Figure 3-3, in beams constructed compositely with floor slabs the effective tension flange width increases with increasing inelastic

deformation. Thus the area of reinforcement contributing to flexural strength increases with the level of inelastic deformation. This action, which is in addition to the strain hardening of reinforcement, results in a significant increase in flexural strength above that sustained at first yield. The high post yielding increase in flexural strength reduces the displacement demand. For the collapse limit state the average strength is more significant than the design strength. To allow for this and for the increasing effective width of the tension flange with increasing inelastic deformation the 1.8 factor given in NZS 1170.5 was therefore reduced to 1.5 in NZS 3101: 2006. The resultant relationship of design return factor versus return period of earthquake actions is shown in Figure 3-1 for both the return factors implied in NZS 1170.5 and NZS 3101; 2006. It should be noted that earthquake return periods vary considerably with seismic regions, see NZS1170.5, C3.1.5.

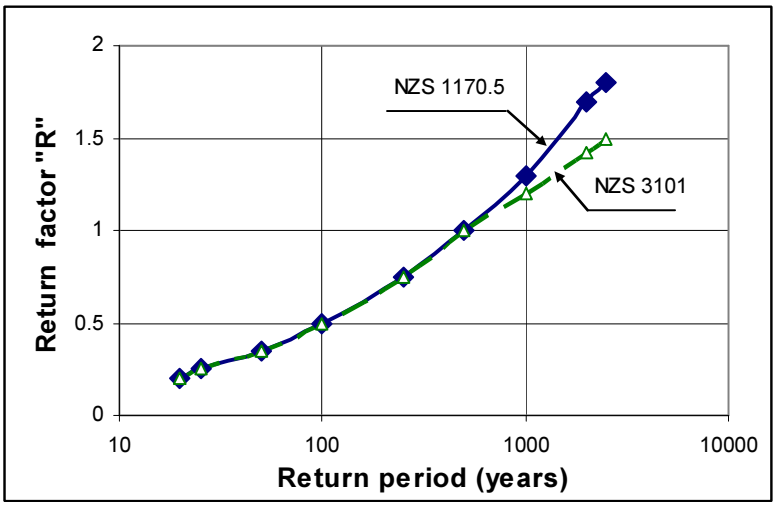

Figure 3.1: Design return factor, R, versus return period

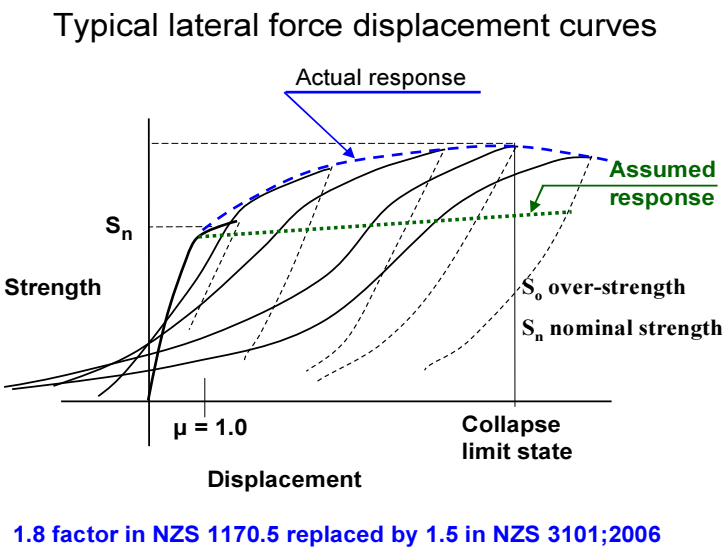

Figure 3-2: Relationship between 500 and 2,500 year return earthquake displacement demands

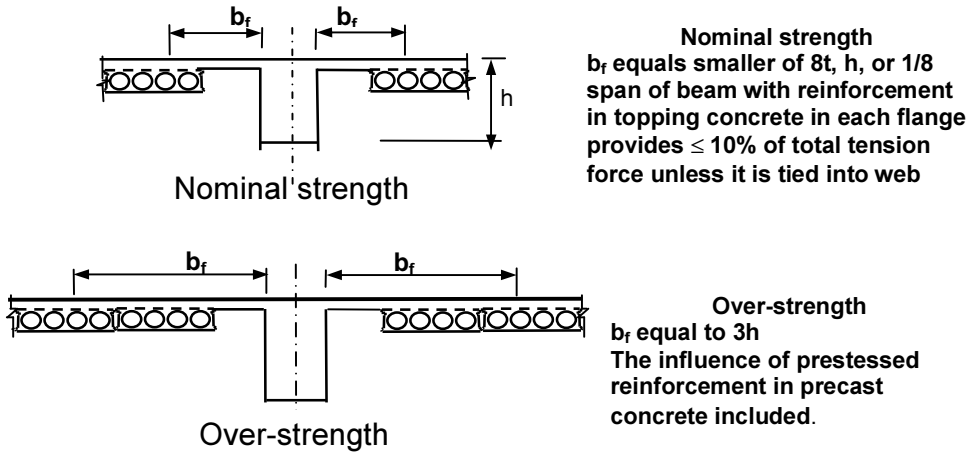

Figure 3-3: Effective flange width at an internal potential plastic hinge according to NZS 3101; 2006

3.3 Factors related to codes of practice that need to be considered in an assessment of hollow-core floors

3.3.1 Introduction

Buildings with hollow-core floors should be assessed for possible retrofit in terms of the requirements in current structural standards, namely NZS1170.5, NZS3101 and where appropriate NZS3404. This process either requires a structural model of the building to be developed and an analysis to be made, or where there are existing calculations these may be adjusted to allow for changes in design practice so that the modified results may be used in the assessment. In carrying out an assessment for retrofit it is necessary to allow for the effects of;

- the structural performance factor, S_p, which reduces the expected peak deformation to a design deformation, which may be sustained several times during an earthquake. In some cases it is important to work with the expected peak displacement, see 3.3.2;
- The drift modification factor when the structural displacement ductility is less than 3.0, to prevent over prediction of inter-storey drifts with low ductility demands, see section 3.3.3.

A seismic assessment of buildings is generally based on an estimate of the predicted performance of a building in comparison to the building if it had been designed using current standards. Such an assessment comes up with a figure of percentage of New Building Standards (% NBS). Where strength is critical this is an easily recognised value. However, with hollow-core floors it is usually the deformation that is critical and care is required in assessing the appropriate value.

In some cases an assessment of seismic actions and displacements induced in hollow-core floors may be based on the results of an existing analysis where the design carried out to the requirements of previous Loadings and Material Standards. Where this is the case the predicted displacements and design strengths need to be modified to bring them into line with current practice, as detailed in NZS1170.5 and NZS 3101; 2006. To achieve this allowance must be made for changes that have been made over the decades in the way in which;

- Sections properties were assessed for stiffness calculations. This can make a considerable difference to the periods of vibration, which in turn can make a considerable difference to the design base shear and storey shear forces acting in different storeys;
- The change in the effective width of tension flange that may act with a beam can make an appreciable difference to the beam strengths, which may have implications for the type of failure that may occur;
- S_p or, equivalent factors in standards prior to 1992, were used to reduce peak deformations to design deformations;
- P-delta actions were assessed;
- Drift modification factors were used, or not used, to allow for changes in deformed shape associated with the formation of plastic hinges;
- Design strengths were assessed, and in particular the values of strength reduction factors that were used;
- Correction factors were applied to reduce displacements associated with the equivalent static method to bring them closer into line with corresponding values from the modal response spectrum method.

Details of how corrections can be made for the above factors and the relative significance of these corrections are given in the reference [Fenwick and MacRae, 2009] and detailed examples are given in Chapter 4.

3.3.2 S_p factor or its equivalent

For the purpose of assessing a critical vertical displacement between a hollow-core unit and adjacent structural element, which can lead to splitting of webs, allowance should be made for the structural performance factor "S_p" in NZS 3101; 2006, or equivalent factors used in previous design standards. The S_p factor was formally introduced in NZS 4203: 1992. Its application reduced the design displacement (deformation) to S_p times the anticipated peak displacement based on the equal displacement concept. The principal rational for applying this reduction was that damage was considered to be more the result of a series of inelastic displacements sustained several times during an earthquake rather than the peak displacement that is sustained only once. The equal displacement concept implies that for a structure with a fundamental period in excess of the natural period of the ground, the maximum displacement of a ductile structure in an earthquake is close to the corresponding displacement of an equivalent elastic structure with the same initial period. This condition only applies provided P-delta effects are negligible. Though the S_p factor was introduced in 1992 other factors were included in previous Loadings Standards between 1976 and 1992, which made similar allowances to the "S_p" factor. These different factors are detailed below. Further details are given in reference [Fenwick and MacRae, 2009].

The values of the S_p factor, or the equivalent factors used in New Zealand Standards over the last four decades, are set out below. The values were taken as;

- 0.7 for the 2004 Earthquake Loadings Standard (NZS1170.5 :2004) for buildings designed with a structural ductility factor of 2 or more and 1.0 for a structural ductility factor of 1.0. This was changed in the Structural Concrete Standard (NZS 3101: 2006) to 0.9 for a structural ductility factor of 1.25 and 0.7 for a structural ductility factor of 3 or more. With both Standards linear interpolation was used between limits noted above;
- 2/3 in the 1992 Earthquake Loadings Standard (NZS 4203);
- 0.5 in the 1976 and 1984 editions of NZS 4203 for equivalent static analysis and 0.55 where the modal method of analysis was used.

The Structural Concrete Standard, NZS 3101: 2006 requires all structures and structural elements to have at least a minimum level of ductility. To satisfy this all elements are required to satisfy a number of minimum requirements. For this reason S_p factors for brittle elements ($\mu = 1$) was not defined. Hollow-core units do not satisfy all the minimum requirements for nominal ductility and in some situations they behave as brittle elements. Hence care is required in selecting an appropriate S_p value.

S_p and peak displacements

The use in design of a structural performance factor "S_p", which reduces the design displacement below the expected peak displacement, is only valid if the structure, or the structural element being considered, has some level of ductility. If it is brittle, or has very limited ductility, then it is the peak displacement which becomes critical in assessing when a failure condition is reached. Splitting of the webs due to incompatible displacements between a hollow-core unit and structural element, such as a beam or a wall, occurs as a result of the tensile failure of concrete. Consequently the failure is brittle in character and it is associated with the peak displacement that is critical and not the design displacement found using current Standards. To obtain realistic predictions of the critical limiting condition it is necessary to allow for the difference between displacements found from standard analysis methods given in NZ Standards and the anticipated the peak displacement. For the web splitting criterion this is most easily achieved by reducing the calculated critical peak displacement that can be safely sustained by multiplying by the structural performance factor, S_p, and determining the displacements following the standard rules.

S_p factor and elongation predictions

Elongation predictions, described in 3.4.2, were derived from test results, where the member under test was subjected to inelastic cyclic loading, with the peak negative and positive displacements being of similar magnitudes. Such displacements do not occur in actual structures in earthquakes, where the peak displacement is reached once in one direction, and high displacements in the opposite direction are seldom sustained. Furthermore in many earthquakes the maximum displacement occurs near the start of the record, while in tests generally the magnitude of the displacements applied to the test unit is progressively increased. Elongation builds up with each inelastic displacement that is applied to a plastic hinge, consequently elongations predicted from test results on the basis of the peak inelastic deformation sustained once in an earthquake are bound to be on the high side. To make some allowance for this effect it is suggested that elongation values found from tests be used with plastic hinge rotations predicted following current design standards. That is the predicted rotations should not be increased to allow for the S_p factor, except for the case where web splitting of hollow-core units is being addressed.

3.3.3 Drift modification factor

The prediction of maximum inter-storey drift in NZS 1170.5: 2004, where the equivalent static or modal response spectrum methods are used, is based on the difference in the maximum displacements of adjacent levels. This difference in displacements is increased to allow for inelastic deformation and further increased by the drift modification factor. There are two reasons why the drift modification factor is used. Firstly, the maximum displacements of each level do not occur simultaneously and hence the difference between adjacent levels gives an under-estimate the maximum inter-storey displacement. Secondly, analyses have shown that displacements based on elastic methods of analysis, namely equivalent static, modal or elastic time history methods, in which displacements have been amplified for inelastic deformation, under-estimate critical storey drifts when compared with corresponding values found from

inelastic time history analyses. This occurs due to a change in dynamic characteristics of buildings associated with the formation of plastic hinges in the structure. To allow for these two factors the difference in maximum inter-storey displacements is multiplied by the drift modification factor (see NZS1170.5, section 7.3). This factor was assessed from comparisons of inter-storey deflections made from the results of analyses of ductile structures ($\mu > 3$), which were analysed using inelastic model time history analyses and analyses based on the modal response spectrum method. The magnitude of the difference between the inter-storey displacements obtained by these two approaches could be expected to increase with the level of inelastic deformation sustained by the structure. Consequently it is appropriate to reduce the drift modification factor in assessment analyses where the structural ductility factor is less than 3. It is suggested that when the structural ductility factor is 3 or more the drift modification factor be taken from NZS1170.5: 2004, Table 7.1 in section 7.3. However, when the structural ductility factor is 1.25 the drift modification factor may be taken as 1.1. For intermediate values of structural ductility between the limits of 1.25 and 3.0 linear interpolation may be used for the drift modification factor.

3.4 Factors considered in design or assessment of hollow-core floors

3.4.1 General

The tentative design criteria for different failure modes of hollow-core floors are set out in Chapter 6. A criterion is given for each form of failure of a hollow-core floor, which covers both the ultimate and collapse limit-states. This follows as closely as possible the approach adopted in NZS1170.5: 2004 and NZS3101: 2006. Checking to find when the critical displacement or design action is reached for the different criteria enables the limiting inter-storey drifts to be found, as detailed in Chapter 6, and these drifts can then be used to assess the proportion of current code requirements %NBS corresponding to each failure mode. This step is described in Chapter 4. From these values the extent of any retrofit that is required to obtain a satisfactory seismic performance can be established.

In assessing the seismic performance of a floor the relevant actions listed below should be considered;

1. Actions induced by gravity loads;
2. Self strain actions associated with temperature change, creep and shrinkage of concrete;
3. Actions induced by earthquakes including both lateral and vertical seismic forces;
4. Axial forces and moments induced in floors due to elongation of plastic hinges in beams which are parallel to the precast units;
5. Transfer of forces though a floor acting as a diaphragm to the lateral force resisting elements in the structure;
6. Degradation of structural elements due to the formation of plastic regions, or other actions, where these elements provide support to precast units.

3.4.2 Elongation of plastic hinges

Reinforced concrete beams, slabs, walls and columns with light axial load ratios $(N^*/A_g f N_c)$, increase in length when flexural cracks form (this is referred to as elongation). This occurs as the magnitude of the strain in the flexural tension reinforcement is greater than the corresponding strain in the extreme fibre of the compression zone and as a result the fibre at mid-depth to increases in length. It is the extension of the mid-depth fibre of a beam, column or wall that is referred to as elongation. The magnitude of this elongation increases very significantly when plastic hinges form.

It is important to allow for elongation of plastic hinges in assessing performance of precast prestressed floors for two reasons;

- Elongation reduces the length of seating available to support precast floor units;
- Any reinforcement connecting the precast units to the supporting structure can be stressed to near its ultimate strength where it crosses the crack at the junction between the units and supporting structure. This action can induce critical structural actions into the floor, which in some cases have the potential to cause collapse.

The mechanisms causing elongation are described in references [Fenwick and Megget, 1993; Megget and Fenwick, 1988]. Two forms of plastic hinge can be induced in concrete structures, namely unidirectional and reversing plastic hinges. The former occurs in gravity dominated beams, where two positive moment plastic hinges form in the span of the beam and two negative moment plastic hinges form against the column faces. With each inelastic displacement sustained during the earthquake the plastic hinge rotations increase. With reversing plastic hinges both negative and positive inelastic rotations are sustained in the same location and there are only two plastic hinges in each beam. For this case the magnitude of inelastic rotation can be assessed from the inter-storey drift [Fenwick et al, 1999]. With unidirectional plastic hinges there is no simple relationship. However, comparative analyses of plastic hinge rotation imposed with a number of different earthquake motions indicate that the rotational demand on a unidirectional plastic hinge may be assessed as k times the equivalent rotation sustained by a reversing plastic hinge that forms next to the face of the column. The value of k is given by;

$$k = 1.0 + 0.63(\mu - 1) \quad for \ \mu \leq 2.0$$
$$k = 1.63\sqrt{(\mu - 1)} \quad for \ \mu \geq 2.0 \qquad \text{(Eq. 3-1)}$$

Elongation at the mid-depth of a beam in a unidirectional plastic hinges can be predicted from;

$$elongation = 0.5\ (d - d')\,\theta \qquad \text{(Eq. 3-2)}$$

Where $d - d'$ is the distance between the centroids of the compression and tension reinforcement in the beam and θ is the rotation in the plastic hinge [Megget and Fenwick, 1988; Fenwick and Davidson, 1993].

In reversing plastic hinges, elongation occurs as a result of both positive and negative inelastic rotations acting together with their associated shear forces. The elongation that is sustained at any stage depends on the displacement history applied to a plastic hinge zone. In particular, the maximum elongation that occurs is smaller in earthquake records where the maximum displacement occurs earlier in the earthquake than when it occurs towards the end of the earthquake.

Several different methods of assessing elongation in plastic hinges have been proposed [Matthews, 2004; Lee and Watanabe, 2003; Restrepo-Posada, 1993]. However, all contain empirical coefficients, which limit their use in practice. None are suitable for inclusion in an analysis package. An analytical model, which shows promise [Peng et al, 2007] is being developed for use with a computer analysis package. However, it is not currently (2010) available and it requires further development before it can be used in analyses of structures. It is hoped that this model will be developed in the future and used to obtain statistical data relating elongation to rotation demand and design ductility levels. Until such information is available recourse is made to the results of tests on cantilever beams and structural frame assemblages (see 3.4.3).

3.4.3 Experimental measurements of elongation

Reinforced concrete beams

Figure 3-4 shows elongation measurements plotted against material strain ratios made on thirteen reinforced concrete cantilever beams, which were subjected to cyclic loading to induce reversing plastic hinges [Fenwick et al., 1981; Fenwick and Fong, 1979]. The material strain ratio is the ratio of curvature sustained in the plastic hinge, calculated as defined in NZS 3101: 2006, clause 2.6.1.3, divided by the nominal curvature at the elastic limit for the section, which is taken as $2\varepsilon_y / h_b$. Figure 3-5 shows corresponding elongation measurements made on subassembly tests of a reinforced concrete frame and hollow-core floor slab [Matthews, 2004; MacPherson, 2005; Lindsay, 2004]. In both figures the elongation measurements refer to the mid-depths of the beams. In the sub-assembly tests cyclic displacements were applied with the positive and negative displacements in each cycle being approximately equal. Greater elongation occurs in this situation than the case where the displacements were greater in one direction, which is the usual situation when structures are subjected to earthquake ground motion. To allow for this effect in design elongation values are calculated from the design material strain levels (curvatures) rather than the peak values (that is no correction is made for the S_p factor). In the test results shown in Figure 3-4 and 3-5 elongation measurements that were made in repeated cycles to the same peak displacements have not been included.

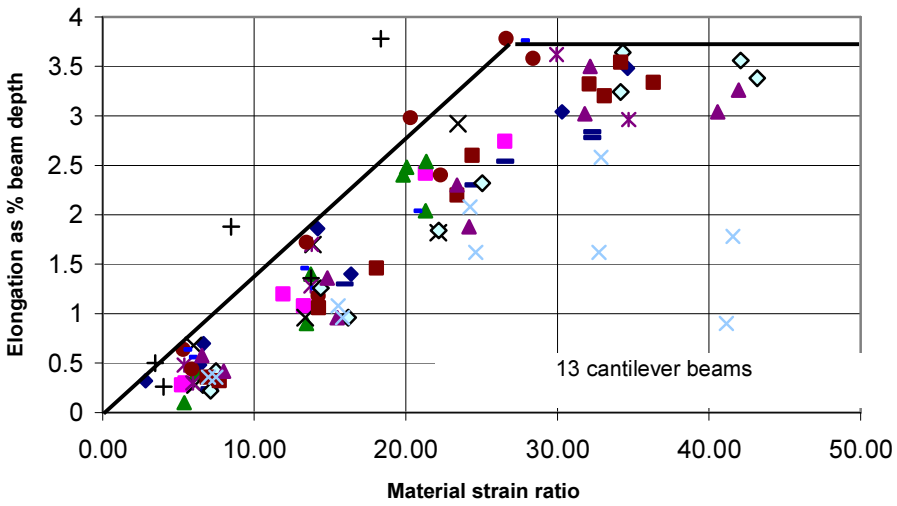

Figure 3-4: Elongation measurements on reversing plastic hinges in cantilever beams

Tests on cantilever Tee beams have shown that passive (not prestressed) reinforcement in a slab does not significantly influence elongation [Fenwick et al. 1981; 1995]. However, prestressed reinforcement in precast floor units spanning parallel to beams provides partial restraint to elongation. As a result plastic hinges in different locations in a floor can sustain different levels of restraint to elongation.

Figure 3-6 shows part of a floor plan where potential plastic hinge locations are labelled as U, R1 and R2. The label indicates the extent that the floor restrains elongation in the plastic hinge. In type U plastic hinges little restraint to elongation is provided (unrestrained) by the floor slab. In type R1 (restrained) the prestressed units provide significant restraint to elongation, while type R2 is intermediate between type U and R1.

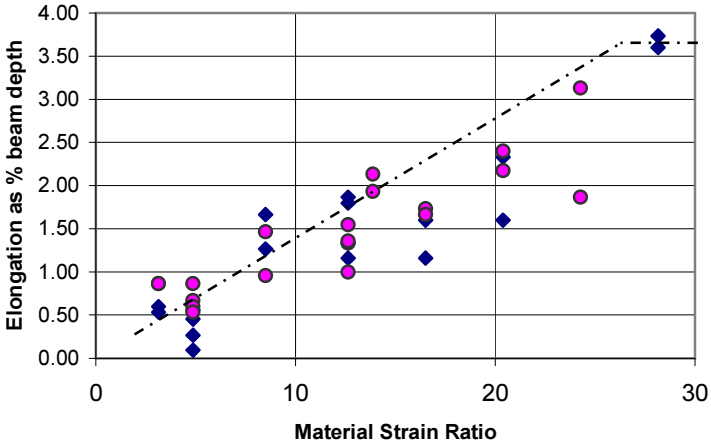

(a) Unconstrained plastic hinges, type U

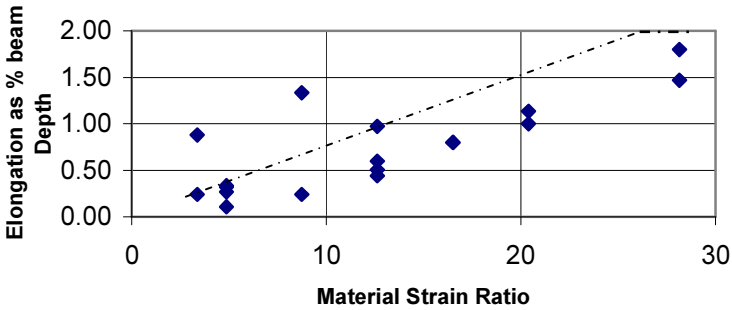

(b) Constrained plastic hinges, type R1

Figure 3-5: Elongation measurements in floor/frame sub-assembly tests

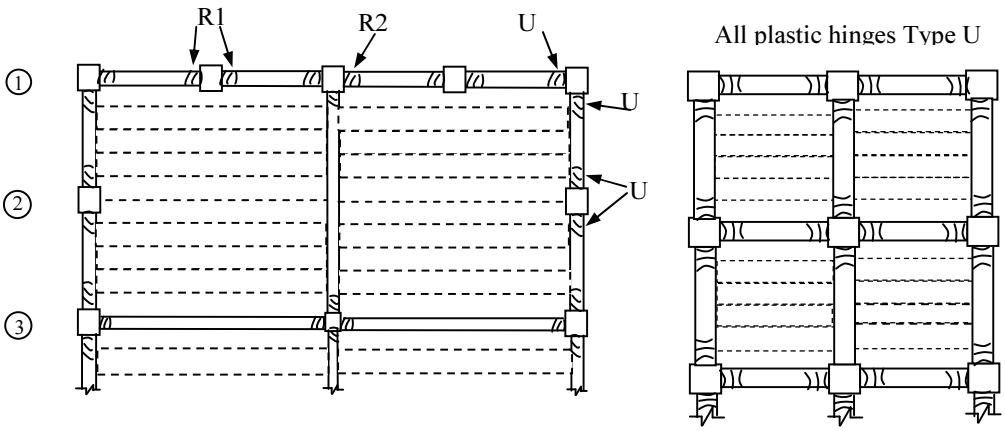

Figure 3-6: Part plan on floors showing plastic hinge elongation types, U, R1 and R2

The potential plastic hinges marked U in Figure 3-6 are located in beams, which either support precast floor units or the potential plastic region is close to the end of the prestressed unit. Where the units are at right angles to the support beams they provide no significant restraint to elongation. As can be seen in Figure 3-5 (a) the elongation measurements in these plastic hinges

are of similar magnitude to those recorded in cantilever beam tests. For the type U plastic hinge the test results indicate that the elongation at the mid-depth of a beam can be assessed as;

$$elongation = 0.0014 h_b M_{sr} \leq 0.037 h_b \qquad \text{(Eq. 3-3)}$$

where h_b is the beam depth and M_{sr} is the ratio of nominal curvature (as defined in NZS 3101: 2006, clause 2.3.1) divided by the curvature corresponding to yield of the reinforcement ($2\varepsilon_y / h_b$). It should be noted that the predicted elongation corresponds approximately to a 95% characteristic value in that approximately 95% of the test measurements have elongation measurements that are smaller than the value given by Equation 3-3.

Potential plastic hinges marked as R1 are located in beams against columns where the precast prestressed floor units span directly past the column. In this situation the prestressed units provide significant restraint to elongation. In addition to providing restraint it results in a substantial increase in the negative flexural strength of the beam [Fenwick et al., 2005, Lau, 2007]. The Concrete Structures Standard, NZS3101: 2006 contains a method of assessing over-strength of these plastic hinges. From the test results it can be seen that that elongation values for the type R1 plastic hinges are approximately half of the corresponding values for the cantilever beams. In this case the elongation can be assessed as;

$$elongation = 0.00070 h_b M_{sr} \leq 0.02 h_b \qquad \text{(Eq. 3-4).}$$

The potential plastic hinge zones marked as R2 are located against a column where there is a transverse beam framing into the column. In this situation there are precast floor units supported by the transverse beam on both sides of the beam. Elongation of the R2 type plastic hinges causes wide cracks to develop between the supporting (transverse) beam and the ends of the precast floor units. These units tie the floor together in each of the bays, which provide restraint to elongation of the type R2 plastic hinges. The restraint to elongation can in some cases arise from the deep beam type bending action of the floor slabs on each side of the transverse beam. This situation may arise where perimeter frames have been designed to resist the majority of the seismic actions and in some cases it can significantly increase the negative moment flexural strength of the plastic hinge [Fenwick et al., 2005; Lau, 2007; Peng, 2009]. The development of deep beam type restraint depends on flexural deformation of the floor slab in the horizontal plane and this can only occur where elongation is greater at the perimeter beam than that in the next parallel internal beam. In the situation where elongation of plastic hinges at an internal beam (Figure 3-6 in row 3) is similar to the elongation in the external beams (in row 1) there is no bending deformation and consequently there is no deep beam action. In this case the plastic hinges behave in a similar manner to a type U plastic hinges.

It should be noted that elongation values predicted by equations 3-3 and 3-4 are likely to be on the high side and apply to earthquake records where significant inelastic deformation is induced before the maximum displacement is reached. In some situations a lesser level of elongation may be critical (for example in situation where negative moments are induced in hollow-core floors near a support). In such cases the elongation may be taken as-

$$elongation = 0.5\theta(d - d') \qquad \text{(Eq. 3-5)}$$

Where θ is the maximum rotation sustained by the plastic hinge.

Minimum elongation of beams

In situations where plastic hinges do not form, or where unidirectional plastic hinges may occur, allowance should still be made for elongation associated with the relative rotation that occurs between precast units and their support ledges, as given by Equation 3-5.

Structural steel beams

For structural steel buildings, where there is composite action between the steel beams and the floor slab, elongation is less than that for similar inter-storey drifts in reinforced concrete beams. In steel moment resisting frames in lieu of theoretical or experimental research it is suggested that the elongation of each beam plastic hinge is taken as **half** that assessed for a reinforced concrete beam of similar depth.

3.5. Actions due to vertical seismic ground motion

3.5.1 Introduction

Vertical seismic ground motion generates inertial forces in members that span horizontally. These actions need to be considered in design or retrofit of elements that have a low level of ductility. The Loadings Standard for Earthquake Actions, NZS 1170.5, in clause 3.2 specifies that the response spectrum for vertical ground motion should be taken as 70% of the corresponding value for horizontal ground motion.

Hollow-core units, which do not have top strands and are reinforced with mesh in topping concrete, have very limited ductility. The strain causing failure of hard drawn wire mesh is typically in the range of 1 to 2 percent. The performance of ductile mesh is uncertain (see Section 7.3). Though the individual wires may be ductile the spot fusion welding between the wires has limited strength and it is unlikely to be capable of sustaining anchorage of a bar stressed into the strain hardened range. Furthermore any anchorage at a transverse bar induces local bending of the anchored bar. To establish the ductility of ductile mesh tests are required of the mesh buried in concrete in a situation that accurately models its action in topping concrete on precast units. Until such tests have been carried out ductile mesh should be treated as similar to hard wire drawn mesh in terms of its ductility.

Tension stiffening of concrete restricts the yielding of mesh reinforcement to the distance between transverse bars (a distance of 150mm in 665 mesh). A consequence of this is that a peak strain in mesh is much higher than the corresponding average tensile strains in the concrete at the same level as the mesh. Bond between plain wires and topping concrete further reduces the strain levels in the wires away from the crack. The local strain amplification due to tension stiffening reduces the critical strain level predicted in a conventional *"plane sections remain plane"* analysis to about a quarter of that found in direct tension tests. Consequently standard ultimate strength theory needs to be modified to enable it to be used to predict the negative ultimate flexural strength of these partially prestressed members. Additional information in determining the negative moment flexural strength of hollow-core floors is given in Appendix A.5.2.

In determining an appropriate structural ductility factor for vertical seismic actions in hollow-core flooring units a number of aspects need to be considered;

1. Mesh has very limited ductility and this can result in poor ductile performance of hollow-core with insitu concrete topping when subjected to negative moments;
2. Under downward loading (acceleration in upward direction) any flexural cracks on the topping concrete close and the member behaves in a similar manner to an un-cracked element. However, under upward loading flexural cracks open to allow the reinforcement to resist negative moments. These cracks significantly reduce the stiffness of the member and give the member different stiffnesses with upward and downward displacements. Consequently greater displacements can be expected in the upward direction than in the downward direction. The change in stiffness with direction of loading means the

commonly used equal displacement and equal energy concepts no longer apply and standard design rules based on these concepts can be expected to lead to an under-estimate of critical upward seismic displacements.

3. Whether reinforced with either mesh or conventional reinforcement, the proportion of reinforcement in the insitu concrete topping is generally low. As a consequence the tension force capacity of the reinforcement crossing a primary crack is insufficient to overcome the tensile strength of the concrete and cause secondary cracks to form. Hence yielding of reinforcement is confined to a short length on each side of the primary crack. This may severely limit the ductility of a member.

In view of these points it is recommended that in design or analysis for retrofit of existing floors seismic actions due to vertical ground motion should be based on a structural ductility factor, μ, of 1.25 and a structural performance factor, S_p, of 0.9 where mesh is used anywhere in the topping concrete. It is tentatively suggested that these values be increased, where ductile reinforcement (Grade E) is used in the topping concrete, to give a structural ductility factor of 2 together with a structural performance factor "S_p" factor of 0.8 (this value is based on Structural Concrete Standard, NZS 3101-2006).

3.5.2 Numerical values of vertical seismic actions

The fundamental period of vibration for vertical excitation of flooring units is generally in the range of 0.1 to 0.35 seconds, which is in the peak range of the design acceleration response spectra. Values given in NZS 1170.5: 2004 for modal response should be used in assessments. A fundamental period of less than 0.1 seconds should not be assumed as cracking of insitu concrete and flexibility of support structure including foundations soils are likely to increase the natural period. Only actions corresponding to the first mode of the floor need to be considered.

The standard assumption used in elastic analysis for ground motion is that equivalent static forces, representing dynamic actions, are proportional to the mass and displacement relative to the ground. Consequently for precast units spanning in a horizontal direction the equivalent static forces are **not** uniformly distributed. They are distributed in proportion to the deflected shape. For hollow-core units supported at each end the deflected shape can be approximated to a parabola. Using this assumption the bending moment, M, and shear, V, at different positions in a span due to vertical seismic actions alone, can be found from Table 3.1 in terms of the vertical seismic force, F_s, acting on the span and the span of the unit, L.

Table 3.1: Distribution of vertical seismic actions along a precast floor unit

x/L	**0.0**	**0.1**	**0.2**	**0.3**	**0.4**	**0.5**
V/F_s	0.5	0.47	0.4	0.28	0.15	0.0
$M/F_s L$	0.0	0.05	0.09	0.13	0.15	0.16

x = distance from support

The vertical seismic force is given from NZS 1170.5: 2004, by-

$$F_s = C_v(T_v, \mu) S_p W \qquad \text{(Eq. 3-6)}$$

Where W is the gravity weight supported by the unit (dead and long term live load where appropriate) and T_v, is the fundamental period of vibration of the unit. It should be noted that these actions need to be added to forces associated with lateral seismic actions and elongation (see Section 3.4.3). Table 3.2 gives the ratio of vertical seismic force acting on a floor in terms of the dead and seismic live load on the span for the case where R is 1.0 for different cities in New Zealand.

Table 3.2: Vertical seismic force, F_s/W, for main city centres for T_v between 0.1 and 0.3s according to NZS1170.5 assuming R is 1.0

Location	μ	Fundamental Period (s)	Site subsoil class A & B	C	D & E
Auckland	1	0-0.35	0.21	0.27	0.27
	2	0.1	0.17	0.21	0.22
	2	0.2	0.15	0.19	0.19
	2	0.3	0.14	0.17	0.17
Wellington	1	0-0.35	0.66	0.82	0.84
	2	0.1	0.52	0.65	0.67
	2	0.2	0.46	0.58	0.59
	2	0.3	0.41	0.51	0.53
Christchurch	1	0-0.35	0.36	0.45	0.46
	2	0.1	0.29	0.35	0.36
	2	0.2	0.25	0.32	0.32
	2	0.3	0.23	0.29	0.29

3.5.3 Combinations of seismic actions

Precast concrete floors subjected to vertical seismic excitation respond in an elastic or near elastic manner. The fundamental period is short. Hence there is an appreciable likelihood that close to peak excitations in both horizontal and vertical actions may occur simultaneously. For simplicity it is recommended that designers assume peak values occur simultaneously and add the seismic actions together. This is a conservative assumption.

Two different situations may arise. In both cases the actions induced at the support or supports should be based on upper characteristic yield strength of reinforcement further amplified to allow for strain hardening.

(a) In the first relative rotation of a precast floor unit to its supporting beam may cause the starter bars to be stressed into the yield, or possibly into the strain hardening range, inducing negative bending moments at one end of the unit and essentially zero moment at the other end support.

(b) Elongation of beams spanning parallel to the precast floor units can apply an axial tension to the starter bars at both support points. Under this situation the unit is subjected to bending moments and axial tension from the starter bars. These moments are smaller than for the case (a) above but the added axial tension induces stress conditions which might be critical in some situations.

In both situations the actions associated with;

- gravity loading, and
- both vertical and horizontal seismic ground motion,

should be added to the actions induced by elongation or otherwise combined in an appropriate manner.

3.6 Basis of design requirements in New Zealand Structural Standards

An overview of the requirements in structural design Standards NZS 3101:2006, AS/NZS 1170 and NZS 1170.5 is set out below to provide a common basis for selecting appropriate criteria for assessment of hollow-core floors.

3.6.1 Serviceability limit-state

For buildings with importance levels of 2 and 3 the design return period is 25 years. The requirement is that damage sustained in an earthquake, wind or snow storm, will not prevent the structure being used for its intended purpose. This is checked by limiting the amount of inelastic deformation that may occur in an event of an earthquake with a nominal magnitude corresponding to a return period of 25 years. In making this assessment member strengths are based on average material properties (NZS 3101: 2006, clause 2.6.3.2).

3.6.2 Ultimate limit-state

Structures are required to sustain actions associated with the ultimate limit-state such that there is a very low probability of failure, collapse or loss of life. This is achieved by;

- Using load factors to determine design actions;
- Basing design strengths on nominal strengths times strength reduction factors;
- Limiting the permissible level of redistribution of structural actions (moment redistribution is one example of this).

The implications of the use of nominal strengths, which are based on lower characteristic material strengths and the use of the strength reduction factors, needs to be appreciated in assessing structures for retrofit. These values result in both strength and ductility values being conservatively assessed compared with values found from tests. If S^* is a design action then the required design strength, ϕS_n, is given by;

$$\phi S_n \geq S^* \qquad \text{(Eq. 3-7)}$$

where S_n is the nominal strength based on lower characteristic material strengths. Generally for flexure, nominal flexural strengths are approximately equal to the average flexural strength, based on minimum permissible reinforcement content, sustained at a section curvature of the order of 3 to 5 divided by 1.1. As the strength reduction for flexure with reinforced concrete is 0.85 the average strength, assuming the minimum required amount of reinforcement is used, is given by;

$$S_{av} \geq 1.1 \, {S_n}/{0.85} \geq 1.29 \, S_n \qquad \text{(Eq. 3-8)}$$

Generally S_{av} exceeds the value given above as generally more reinforcement is used than the minimum amount that is theoretically required.

Figure 3-7 compares the load deflection characteristics of a one storey moment resisting frame and an analysis based on standard design assumptions for the ultimate limit state. From this figure it can be seen that for a structural ductility factor of 5, the typical displacement ductility in a test would be 3.9 and the typical strength would be 1.4 times the design strength at the design displacement ductility. The 1.4 coefficient allows for the ratio of the average strength to the nominal strength (1.29) (assuming minimum reinforcement is used) and a further increase in strength due to strain hardening (1.08). In this example it is assumed that yielding occurs in the beams or columns and that the structure does not have floors that act compositely with the beams. Where a beam sustaining a plastic hinge acts compositely with a floor slab increasing the plastic

deformation increases the elongation. This results in an increase in the width of slab that acts with the beam. That is the effective flange width which acts to resist flexural tension increases. The assumptions regarding the effective width of flange acting with an internal beam plastic hinge, as given in NZS 3101:2006, are shown in Figure 3-3 and a typical lateral force versus displacement for a structure subjected to cyclic inelastic loading is shown in Figure 3-2.

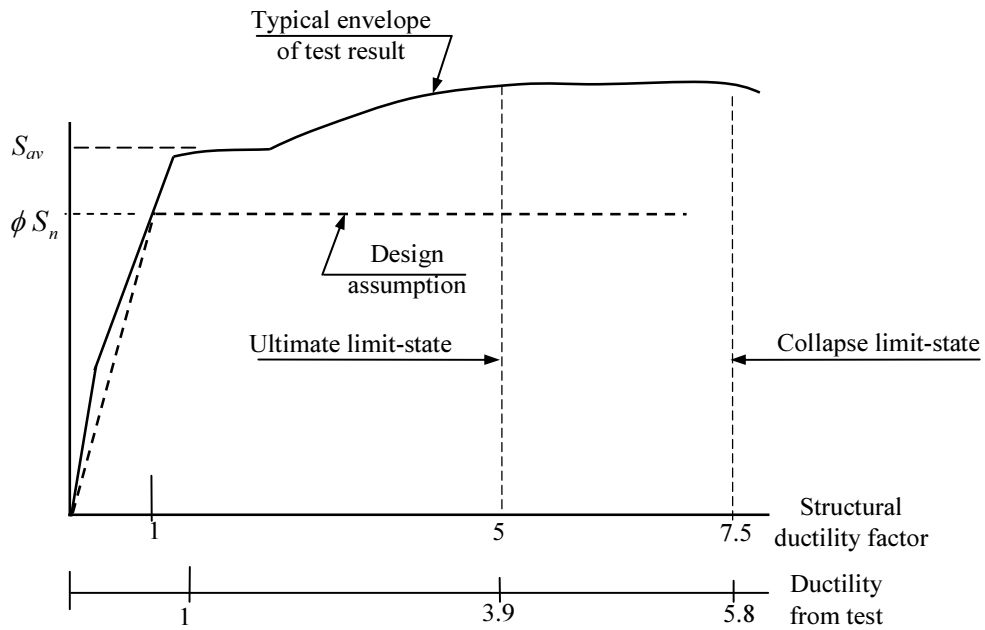

Figure 3-7: Relationship between design ductility and typical ductility observed in tests

3.6.3 Collapse limit-state

The need to consider seismic performance of structures above the level corresponding to the ultimate limit state has been recognised in New Zealand since the 1982, when the first edition of NZS 3101 was published. With NZS 1170.5: 2004 the intend is that there is a (small) margin of safety against collapse of buildings subjected to an earthquake with a return period of 2,500 years. If the requirements of NZS 1170.5: 2004 and NZS 3101: 2006 are followed there is no need to check this limit state. In these Standards critical values have been chosen to satisfy the more critical of the ultimate limit-state or collapse limit-state conditions. For example the material strain limits for flexure and axial load in NZS 3101: 2006 (with amendment 2) have been selected so that the ultimate limit state deformation can be sustained with a high level of certainty while the corresponding values for the collapse limit-state are below the average material strain levels sustained at failure in the tests from which the values were calculated. In addition with the ultimate limit-state redistribution of structural actions is limited to 30% of moments in beams and columns. However, for the collapse limit state there is no limit on redistribution of structural actions between different lateral force resisting elements in the structure, provided equilibrium is satisfied. Where design criteria are developed from testing or first principles, which are not set out in the Standard (NZS 3101: 2006), consideration should be given to both the ultimate and collapse limit-states.

3.7 Tensile strength of concrete

In assessing an appropriate value for the tensile strength of concrete for use in a design or in retrofit assessment of a hollow-core floor it is essential that the difference between the direct tensile strength and flexural tensile strength (also known as modulus of rupture) is recognised. The flexural tensile strength of concrete is found from bending tests on standard shaped specimens, which have a width of 100 mm and a depth of 100 mm. The direct tensile is seldom measured as it is difficult to apply a direct uniform stress to test specimens. The splitting tensile strength (Brazilian test) is found by applying compression across the diameter of standard cylinders (100 or 150 mm in diameter). Both the flexural tensile strength and the splitting strength are calculated from test measurements based on the assumption that the stress strain behaviour of concrete in tension is linear up to the point where failure occurs. However, this assumption is not correct and some non-linearity occurs prior to cracking. Even when cracks have formed some tensile resistance remains as some hydrated cement crystals can span crack widths of the order of 0.2 mm in width [CEB-FIP 1990; Gopalaratnam and Shah 1985]. The direct tensile strength is of the order of 60 percent of the modulus of rupture found from measurements made on standard shaped specimens and 90 percent of the splitting strength (Brazilian test). The flexural strength varies with the size of the member. With a 2 m deep member the flexural tensile strength approaches the direct tensile strength, while the corresponding value for a 100 mm rectangular section is approximately 1.6 times the direct tensile strength. Many factors influence the tensile strength of concrete. However, most codes of practice only recognise the influence of the cylinder strength. Other factors include aggregate grading, aggregate type, admixtures, the direction of tensile stress relative to the direction of casting and the length of the member or region of the member subjected to tension.

Tensile stresses can be induced in members due to self strain actions, such as differential temperature conditions or differential shrinkage and creep of concrete. Where the strength of a member depends on the tensile strength it is essential to make allowance for possible adverse effects due to self strain actions.

Typical values of direct tensile strength, f_{dt}, are given below. These values are based on the recommendations contained in the CEB-FIP Model Code, 1990, some of which are contained in the commentary to NZS 3101; 2006. To obtain the flexural tensile strength some allowance should be made for non-linear behaviour of the concrete in tension. To allow for this effect the flexural tensile strength may be taken as the product of the direct tensile strength and a factor which varies with depth and shape of the section.

When the extreme tension fibre is in the insitu concrete topping above a hollow-core unit the shape of the flexural tension zone is similar to that of a rectangular beam. Consequently the factor relating the modulus of rupture to the direct tensile strength can be taken from the literature [CEB-FIP, 1990]. For the case of a 300 mm hollow-core member with 75 mm of topping concrete, the flexural tensile stresses at failure can be taken as 1.27 times the corresponding value of direct tensile strength. When the flexural tension is on the bottom surface the concrete below the voids resists a high proportion of the flexural tension force. For this situation, very limited stress redistribution can occur when the concrete enters the non-linear range. Consequently the modulus of rupture is close to the direct tensile strength. For this situation the appropriate flexural tensile strength is assessed as close to 1.05 times the corresponding direct tensile strength.

The variation in upper and lower characteristic strengths for tensile strength of concrete as indicated in Table 3.3 is consistent with a coefficient of variation of close to 20 percent. This variation does not allow for changes in strength associated with compression strength of concrete, direction of casting or self strain tensile stresses due to different shrinkage etc. In assessing test

results, where the stability of a structure or structural element such as a hollow-core unit depends on the tensile strength, it is essential to allow for the variability of the tensile strength. When testing to establish an equivalent value to the corresponding nominal strength found using standard code clauses it is essential to allow for the variation in tensile strength of concrete and for the appropriate strength reduction factor, which is 0.6 for tensile strength.

Table 3.3: Limiting direct tensile strength, MPa

Cylinder strength (MPa)	Tensile strength for direct stresses – average, upper and lower characteristic values (MPa)		
	Average	Upper	Lower
30	2.9	3.84	1.98
50	4.1	5.40	2.78

To be consistent with the Loadings Standard, "AS/NZS 1170: 2002-2004", and the Concrete Structures Standard, "NZS 3101: 2006", the design tensile strength for the ultimate limit state should be based on the ***lower characteristic strength*** and it should be used with a ***strength reduction factor*** of ***0.6***. In NZS 3101: 2006 the direct tensile strength is given as $0.36\sqrt{f'_c}$.

3.8 Conclusions

1. Due to the potentially serious consequences of the failure of a hollow-core floor in a multi-storey building it is recommended that the floors be retrofitted to a minimum level of 2/3rd of the current design standards. This should occur even when remaining structural elements in the building are retrofitted to the minimum of 1/3rd of current design standards.
2. Due to the brittle nature of hollow-core units it is essential that differential displacement between a structural element and a hollow-core unit, which can lead to web splitting, is assessed on the basis of the anticipated peak displacement in a design level earthquake. To achieve this objective either the critical limiting vertical displacement that can be safely sustained should be multiplied by "S_p", or the differential vertical displacement found in a structural analysis complying with NZS1170.5 and NZS3101: 2006, should be multiplied by "$1/S_p$" after all allowances have been made for inelastic deformation and P-delta actions etc.
3. Elongation in plastic hinges has important effects on the seismic performance of hollow-core floors. Expressions are given for the magnitudes of elongation that may be sustained with different forms of plastic hinge in terms of the material strain ratio in the plastic hinge being considered. The expressions for elongation are based on test results.
4. Seismic actions due to vertical ground motion can induce critical actions in hollow-core floors. These actions need to be added to axial forces and bending moments induced by gravity loads, lateral seismic forces and elongation actions associated with beams that are parallel to the precast units.
5. In assessing the results of tests on hollow-core units, where the strength depends on the tensile strength of concrete, due allowance should be made for the variability of tensile strength. Where tests are made to assess an ultimate limit state a coefficient of variability in the tensile strength of at least 20% should be used to assess the lower characteristic

strength and this value should be multiplied by the appropriate strength reduction factor, which is given as 0.6 in NZS 3101: 2006, clause 2.6.3.3.

References

CEB-FIP, 1990, Comite Euro-international du Beton and Federation Internationale de la Preconstrainte,. *CEB – FIP Model Code 1990 Design Code, 1990.* Thomas Telford, London, 1993, pp 437.

Fenwick R, Bull D, MacPherson C, Lindsay R, 2006. *The Influence of Diaphragms on Strength of Beams*, NZSEE Conference, Napier, March, Paper No. 21.

Fenwick R. C, Davidson B. J, 1993. *Elongation in Ductile Seismic Resistance Reinforced Concrete Frames*, Paulay Symposium, ACI Special publication SP-157, pp 141–168.

Fenwick R. C, Davidson B. J, Lau DBN, 2005. *Interaction Between Ductile RC Perimeter Frames and Floor Slabs Containing Precast Units*, NZSEE Conference, Wairekei, March, Paper No. 23.

Fenwick R. C., Davidson B. J and McBride A, 1995. *The Influence of Slabs on Elongation in Ductile Seismic Resistant Frames*, Proceedings NZNSEE Technical Conference on Earthquake Engineering, April, pp 36–43.

Fenwick R. C, Dely R, Davidson B. J, 1999, *Ductility Demand for Uni-directional and Reversing Plastic Hinges in Ductile Moment Resisting Frames*, Bulletin of NZ National Society for Earthquake Engineering 32(1): March, pp 1–12.

Fenwick RC, Fong A, 1979. *Behaviour of Reinforced Concrete Beams under Cyclic Loading*, University of Auckland, Department of Civil Engineering, Research Report No. 176, December, p 49.

Fenwick R. C, Megget L. M, 1993. *Elongation and Load Deflection Characteristics of Reinforced Concrete Members Containing Plastic Hinges*, Bulletin NZ National Society for Earthquake Engineering 26(1): March, pp 28–41.

Fenwick R. C, Tankat AT, Thom CW, 1981. *The Deformation of Reinforced Concrete Beams Subjected to Inelastic Cyclic Loading – Experimental Results*, University of Auckland, School of Engineering Report No. 268, October, p 72.

Lau DBN, 2007. *Influence of Precast Prestressed Flooring on Seismic Performance of Reinforced Concrete Perimeter Frame Buildings*, PhD thesis, Civil and Environmental Engineering, University of Auckland, April, pp 368.

Gopalaratnam V. S. and Shah S. P., 1985, *Softening Response of Plain Concrete in Direct Tension,* Journal of American Concrete Institute, Vol. 82, May-June, pp310-323

Lee JY, Watanabe F, 2003. *Predicting the Longitudinal Axial Strain in the Plastic Hinge Regions of Reinforced Concrete Beams Subjected to Reversed Cyclic Loading*, Engineering Structures 25(7): 927–939.

Lindsay R, 2004. *Experiments on the Seismic Performance of Hollow-core Floor Systems in Precast Concrete Buildings*, ME thesis, Civil Engineering, University of Canterbury.

MacPherson C, 2005. *Seismic Performance and Forensic Analysis of Precast Concrete Hollow-core Floor Super-assemblage*, ME thesis, Civil Engineering, University of Canterbury.

Matthews J, 2004. *Hollow-core Floor Slab Performance Following a Severe Earthquake*, PhD thesis, Civil Engineering, University of Canterbury.

Megget LM, Fenwick RC, 1988. *Seismic behaviour of a Reinforced Concrete Portal Frame Sustaining Gravity Loads*, Proceedings Pacific Concrete Conference, Vol. 1, November. Auckland, pp 41–52.

Peng B, Dhakal R, Fenwick R, Carr A, Bull D, 2007. *Analytical Model on Beam Elongation within the Reinforced Concrete Plastic Hinges*, NZSEE Conference, Palmerston North, April, Paper No. 43.

Restrepo-Posada J. I, 1993. *Seismic Behaviour of Connections Between Precast Concrete Elements*, University of Canterbury, Department of Civil Engineering Research Report, No. 93-3, p 385.

SANZ, 2006. *Concrete Structures Standard, NZS 3101-2006, including amendments 1 and 2 (2008)*, Standards New Zealand.

SANZ, 2004. *Earthquake Actions Standard, NZS 1170.*, Standards New Zealand.

Chapter 4

Rating the seismic performance of hollow-core floors

4.1 Introduction

Design criteria, which are set out in Chapter 6, enable the limiting drift that can be safely sustained by a hollow-core floor in an earthquake to be determined. To assess the relative vulnerability of a particular floor the critical drift needs to be related to the magnitude of the design earthquake which would just induce this drift. The magnitude of this earthquake can be expressed as a proportion, or a percentage, of the magnitude of the ultimate limit state design earthquake that would be applied in the design of a new building using current design standards.

In the Earthquake Actions Standard, NZS1170.5: 2004 a basic response spectrum is multiplied by the earthquake return factor, R, to give the design response spectrum for the ultimate limit state (AS/NZS 1170.0: 2002). For buildings with an importance classification of 2, which covers the majority of buildings, R is equal to 1.0. For temporary buildings and buildings of low importance R is less than one and for important buildings it is greater than one. The value of R nominally relates to the design return period of the earthquake, with a value of 1.0 corresponding to a 500 year return period (AS/NZS1170.0: 2002). Design or assessment for different magnitudes of earthquake actions is made by changing the magnitude of R.

To relate a critical action, such as a storey drift, to the magnitude of the earthquake actions that just induces the action involves;

1. Analysing the existing building for earthquake actions required by current standards for the ultimate limit state.
2. Varying the magnitude of the earthquake actions by multiplying the design response spectrum by earthquake return factor, R, until the critical condition, (generally an inter-storey drift level) is just attained.
3. The ratio of R found in step 2 to the value used in step 1 expressed as a percentage gives a measure of the potential seismic vulnerability. This ratio, expressed as a percentage, is referred to as the percentage of New Building Standards, (%NBS).

The approach described above is referred to as option “a” in this chapter and designated as %NBSa.

There is an alternative and simpler measure that may be used, which gives a conservative value of the %NBS. With this approach the %NBS is taken as the ratio, expressed as a percentage, of the critical action that the hollow-core floor can safely sustain to the corresponding action that would be induced if the ultimate limit state actions corresponding to current standards had been applied to the building. This is referred to as option “b” and in this chapter and designated as %NBSb in this chapter. The %NBSb values may be used as a preliminary step in determining the %NBSa values.

Figure 4.1 illustrates a typical relationship between the earthquake return factor, R, and the predicted inter-storey drift in a building. When P-delta actions become critical it can be seen that the relationship between predicted inter-storey drift and earthquake return factor becomes non-linear. The earthquake return values, R_a and R_b corresponding to the two %NBS options are illustrated in the figure. The %NBSb measure is based on a linear approximation and consequently it always gives a more conservative assessment than the ratio based on %NBSa.

The required base shear and storey shear strengths and inter-storey drifts in a building are made up of two components, namely;

- The storey shear due to inertial forces and deformations, as assessed by a modal or equivalent static analysis;
- The storey shears and deformations acting on lateral force resisting elements induced by P-delta actions.

To carry out an assessment it is advantageous to keep these two components separate.

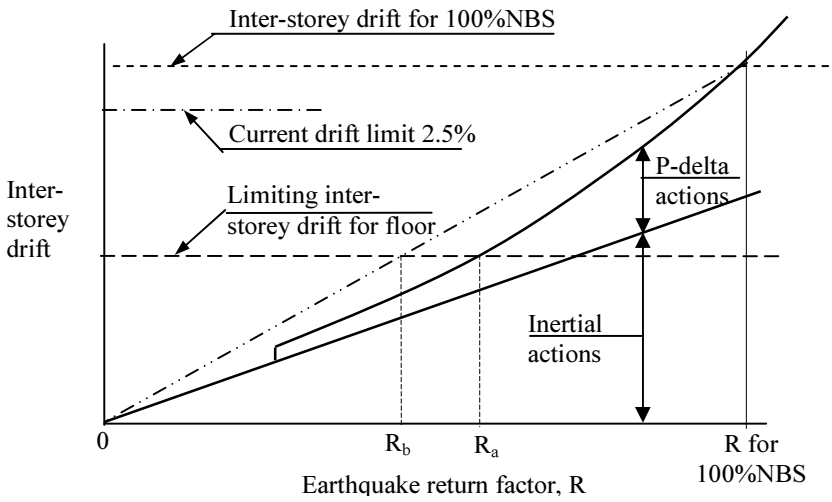

Figure 4-1: Relationship of inter-storey drift and earthquake return factor

4.2 Basic concepts

Structural ductility factor and inter-storey drifts due to inertial forces

The structural ductility factor, μ, is defined as the ratio of the storey shear force for inertial forces found assuming elastic response divided by the design storey shear force provided to balance the inertial actions assuming ductile response. The structural ductility factor, μ, is given by the expression $\mu = V_e / V_\mu$, where V_e is the shear force corresponding to elastic response of the building to inertial forces and V_μ is the corresponding design shear force based on the chosen the structural ductility factor, μ. It should be noted that both V_e and V_μ are found neglecting P-delta actions. The equivalent displacement concept implies that, provided P-delta actions are excluded from the analyses, the peak lateral displacement of a ductile structure is equal to the corresponding peak displacement obtained if the structure had responded elastically. This is an approximation, but it forms the basis of many of the requirements contained in overseas codes of practice including the current Earthquake Actions Standard (NZS1170.5: 2004) and previous editions of the Loadings Standard (NZS4203). On the basis of this concept the component of displacement associated with the inertial forces is independent of the structural ductility factor for a given design level earthquake.

The deflected shape envelope for inertial forces in ductile moment resisting frame buildings is defined in NZS1170.5, clause 7.2.2(a). For this case the lateral displacements are independent of the structural ductility factor, which is consistent with the equal displacement concept. However, for buildings where structural walls resist the seismic actions the envelope of lateral deflections is defined in NZS1170: 2004 by clause 7.2.2(b). In this case the equivalent displacement concept is not strictly correct but it is a reasonable approximation. Hence in a design or assessment if the

structural ductility factor is changed it can generally be assumed that there is no significant change in the lateral displacement due to inertial forces acting on the structure provided P-delta actions are not included in the analysis.

P-delta forces and inter-storey drifts

The basic set of forces used to represent P-delta actions in NZS1170.5: 2004 is derived from the deflected shape envelope induced by the inertial forces of the centres of mass at each level of the building (NZS1170.5: 2004, clause 6.5.4.2). The commentary to NZS1170.5 C6.5.4.2 outlines a simple method of assessing these forces. As this deflected shape is due to inertial forces it does not change with the structural ductility where the profile is determined NZS1170.5: 2004 clause 7.2.2(a), which applies to ductile moment resisting frame buildings, and the change is generally relatively minor where the deflected shape is determined by NZS1170.5 clause 7.2.2(b), which is critical for wall structures. To find the P-delta actions the basic P-delta set of forces is multiplied by $K\beta$ and the resultant forces are applied to the analytical model of the building at the centres of mass, see NZS1170: 2004, clause 6.5.4.2. The results of this analysis give lateral displacements for each level which are multiplied by the structural ductility factor to give the predicted drift associated with P-delta actions. The displacements due to P-delta actions increase in proportion to the structural ductility factor for buildings where the deflection profile associated with inertial forces is defined by NZS3101: 2006 clause 7.2.2 (a) (ductile moment resisting frame buildings), and it is an approximation for the cases where the deflection profile is defined by clause 7.2.2 (b) in NZS1170.5, which applies to wall buildings.

4.3 Calculation of %NBS

To calculate the %NBSb for option b from an analysis of an existing building the following steps may be followed.

Step 1

For buildings where the lateral force resistance is provided by ductile moment resisting frames determine the design storey shear strength of the critical structural frame in the critical storey. For structural wall buildings determine the design flexural strength at the critical section of the critical wall.

Step 2

Analyse the building to find the critical structural actions when 100% of the NBS seismic actions are applied. In these analyses the maximum permitted structural ductility factor should be used. With ductile moment resisting frame the storey shear forces and inter-storey drifts need to be found. For buildings where structural walls resist the lateral forces the critical actions include the bending moments at the critical sections of the walls (potential plastic hinges) and the inter-storey drifts.

Step 3

Adjust the structural ductility factor so that the 100%NBS required strength is equal to the provided design strength. The example below illustrates how this can be achieved for a building with ductile moment resisting frames. For building with structural walls the critical value is the design flexural strength in the primary plastic hinge in the critical wall.

Step 4

To calculate the critical earthquake return factor, R, the values found in step 3 are adjusted by reducing the value of R until the critical condition is just reached. The process is illustrated in the second half of the example below.

4.4 Example 1: Frame building designed to NZS4203: 1992 and NZS 3101: 1995

A perimeter frame in a building with an importance classification of 2 has a fundament period of less than 2 seconds and it is found to have the design shear strength in the critical storey of 1,000kN. The inter-storey height is 3,550mm. The corresponding modal response spectrum storey shear force for an elastic response is 6,600kN. On the basis of a structural ductility factor, μ, is 6. the relevant critical values of storey shear and deformation found in the analyses for the inertial forces and P-delta forces are listed in bold in the second to bottom row in Table 4-1.

The required inertial storey shear force is 6,600/μ, which equals 1,100kN. The critical drift limit associated with the particular hollow-core floor that is being assessed has been found from the criteria in Chapter 6 to be 1.5%.

For an importance classification of 2 the design earthquake return period is 500 years and the earthquake return factor, R, is equal to 1.0. To calculate the %NBSb for a limiting inter-storey drift it is necessary to adjust the analytical values obtained in the structural analysis so that the storey shear required by inertial and P-delta actions is equal to the provided design storey shear strength of 1,000kN.

The basic set of P-delta forces is multiplied by βK to assess the P-delta deflections. The value of β is constant for μ greater than 3.5 but it reduces with smaller μ values (NZS1170.5: 2004, clause 6.5.4.2). Provided the structural ductility factor is equal to or more than 3.5 changing its value does not change the magnitude of the storey drifts associated with the inertial forces and hence it does not change the P-delta storey shear force. The storey shear force available to resist the inertial storey shear is equal to the provided design storey strength, 1,000kN, minus the P-delta storey shear, 321kN, which gives a value of 679kN. As the elastic response for inertial actions was 6,600kN the revised structural ductility factor is 6,600 divided by 679, giving a value of 9.72. The storey drift due to P-delta actions increases in proportion to the structural ductility factor. Hence with a ductility of 9.72 the P-delta storey drift increases from 22mm (see Table 4.1) to $22 \times {9.72}/{6} = 36mm$. The design inter-storey drift consisting of the sum of inertial and P-delta drifts multiplied by the drift modification factor to give a value of 109mm, which corresponds to a storey drift divided by storey height of 3.07%.

Table 4-1: Calculation the 100%NBSb for a limiting drift

Design shear	Ductility Factor **	Inertial response		P-delta actions		Total drift	Total drift x DMF*	Storey Drift
		Shear	Drift	Shear	Drift			
(kN)	M	(kN)	(mm)	(kN)	(mm)	(mm)	(mm)	%
1,421	**6**	**1,100**	**37**	**321**	**22**	**59**	**88.5**	**2.49**
1,000	9.72	679	37	321	36	73	109	3.07

* DMF drift modification factor equal to 1.5 for μ > 3.5.
** Structural ductility factor

Hence in terms of NBSb the percentages are;

- for strength 70% $(1.000/1{,}421)$;
- for ductility 62% $(6/9.72)$;
- for drift 49% limited by hollow-core floor $(1.5/3.07)$.

Calculation of ratio of design earthquake return factors %NBSa

As noted previously a change in the design level earthquake magnitude is achieved in NZS1170.5: 2004 by multiplying the design response spectrum by the Return Factor *R* (see clauses 3.1.1 and 3.1.5). Hence to find a limiting condition a series of analyses could be carried out by varying *R* until the critical condition is reached. However, by carrying out separate analyses for the inertia forces and P-delta actions further analyses are not required as each component can be modified to allow for the change in structural ductility and associated return factor.

The process to determine the %NBSa values conveniently starts from the 100%NBSb values, which are listed in Table 4.1 and shown in bold at the top of Table 4.2. In the table a range of return periods are shown so that trends can be seen. However, in practice the critical return period can be obtained using a simple spread sheet. In this case the critical value is an inter-storey drift divided by storey height of 1.5%.

The design response spectrum is proportional to the earthquake return factor. Hence a change in this factor leads to linear changes in the inertial shear force, the storey drifts and the P-delta storey shear force (as this is calculated from the deformed shape induced by the inertial actions). The storey shear available to resist the inertial forces is equal to the provided storey shear strength minus the P-delta storey shear force. Thus a change of R from 1 to 0.9 results in the elastic inertial response storey shear decreasing to 0.9 times the R=1 (assuming this is a category 2 building) elastic response of 6,600kN giving a value of 5,940kN. The P-delta storey shear decreases to 0.9 x 321, giving 289kN, which leaves the design storey strength of 1000kN minus 289kN giving 711kN to resist the inertial forces. The structural ductility factor is equal to the elastic inertial storey shear divided by 711, which gives a value of 8.35. The corresponding P-delta drift due to inertial forces is proportional to the R factor and the ratio structural ductility factors. Hence the P-delta drift of 22mm for R=1 reduces to 0.9 x 22 = 19.8 due to the change in R from 1 to 0.9 and the corresponding change due to different structural ductility factors is equal to $19.8 \times {}^{8.35}\!/_{9.72}$ = 17.0mm. When the structural ductility factor drops below 3.5 the β factor used to assess P-delta actions changes (see NZS1170.5, clause 6.5.4) and it is necessary to allow for this change by multiplying by the ratio of β values (shown as β/β_i in the table). The resultant storey drift is found by multiplying the sum of the inertial and P-delta storey drifts by the drift modification factor (see Section 3.3.3).

In terms of the ratio of earthquake return factors the %NBSa are;

- for strength of 1000kN (sum of inertial and P-delta shears) at maximum ductility R is 0.71, giving 71%NBSa;
- for structural ductility factor of 6, R equals 0.71 (same as for strength) giving 71%NBSa
- for drift limited by hollow-core floor of 1.5%, R equals 0.63 giving 63%NBSa..

Comparison of %NBSa and NBSb values found by options "a" and "b"

For the example above there is appreciable difference between the critical limit measures given by the %NBSa and %NBSb values. However, this is not always the case. The main cause of the difference arises from the non-linearity of drift with return period factor, which principally arises from the drift due to P-delta actions. This becomes significant where the provided design strength is low compared with the 100%NBS strength and for the cases where the lateral force resistance is provided by ductile moment resisting frames. With structures where the lateral resistance is provided by walls P-delta actions are smaller and the differences between the "a" and "b" options is smaller. Option NBSa gives a more consistent measure of potential seismic performance than NBSb.

Table 4-2: Calculation of earthquake return factor

R	ductility	Inertia shear (kN)	inertia drift (kN)	P-delta shear (kN)	P-delta drift (mm)	β/βi	DMF	Storey drift (mm)	% drift/ storey ht	Stable
1	**9.72**	**679**	**37.0**	**321**	**35.6**	**1**	**1.50**	**109.0**	**3.07**	**OK**
0.9	8.35	711	33.3	289	27.6	1	1.5	91.3	2.57	**OK**
0.8	7.10	743	29.6	257	20.8	1	1.5	75.7	2.13	**OK**
0.7	5.96	775	25.9	225	15.3	1	1.5	61.8	1.74	**OK**
0.6	4.90	807	22.2	193	10.8	1	1.5	49.5	1.39	**OK**
0.5	3.93	840	18.5	161	7.2	1	1.5	38.6	1.09	**OK**
0.4	3.03	872	14.8	128	4.4	0.87	1.5	28.9	0.81	**OK**
0.3	2.19	904	11.1	96	2.4	0.63	1.32	17.8	0.50	**OK**
0.2	1.41	936	7.4	64	1.0	0.40	1.14	9.6	0.27	**OK**
0.1	0.68	968	3.7	32	0.3	0.19	0.97	3.8	0.11	**OK**
0.53	**4.22**	**830**	**19.6**	**170**	**8.2**	**1**	**1.5**	**27.8**	**1.17**	**OK**

β/β_1 is the ratio of β used in calculating P-delta actions
DMF is the drift modification factor
OK indicates that $\mu<10$
Ductility = structural ductility factor

4.5 Assessment of buildings based on existing design calculations

4.5.1 Introduction

In the previous example it was assumed that the building was modelled in a manner that is consistent with current material and loading standards and it was analysed to find the structural actions corresponding to the application of current standards for the ultimate limit state. The results from the analysis were then manipulated to give the %NBS values. However, in many cases it is likely that there are existing design calculations, which can be used instead of modelling the structure and re-analysing it. In such situations the design values need to be modified to allow for changes that have occurred in design standards from the time it was designed to the current structural standards.

4.5.2 Example 2: Assessment of floor in building designed to NZS4204: 1992 and NZS3101:1995

A multi-storey building in which lateral forces are resisted by ductile moment resisting frames has a total height in excess of 30m and an inter-storey height at the level being considered of 3,500mm. It was designed to meet the requirements of NZS4203: 1992 with the recommended P-delta provisions in the Commentary and the stiffness recommendations contained in the Commentary to NZS3101: 1995. The building has an importance classification of 2 and the corresponding value of R is 1.0 for the ultimate limit state. With a structural ductility factor of 1.0 (elastic response) the modal base shear force was 8,700kN. In design a structural ductility factor of 6 was used, which gave a design base shear force of 1,450 to balance the modal (inertial) actions. An additional base shear force of 350kN was added to the 1,450kN to balance P-delta actions. This gives a total storey design shear force of 1,800kN. In the storey being considered the design storey drift due to the modal shear amplified for inelastic deformation was 37mm and the additional deflection due to P-delta actions was 15mm. This gave a total inter-storey deflection of 52mm (the limit given in NZS4203: 1992 was 1.5% of inter-storey height, or a value of 52.5mm. From an assessment of the floor, using the criteria set out in Chapter 6, it is found that the critical inter-storey drift divided by inter-storey height that the hollow-core floor could safely sustain is 1.2%.

There are no significant changes in the coefficients applied to gross section properties to allow for the influence of cracking on flexural stiffness between the current Structural Concrete Standard and NZS3101: 1995. Hence no changes are required in assessing the fundamental period or elastic deflections in the original design. An analysis of the building to current standards indicates that the required base shear force for 100%NBS corresponding to a structural ductility factor of 1.0 is 10,500kN.

In the second column in Table 4.3 the results of the analysis, which was made for the design of the building, are listed. In the third column these are revised without changing the strength to give the corresponding values in terms of NZS1170.5: 2004. In the 4th column the corresponding values are given for 100%NBS (to NZS1170.5: 2004).

The text below explains how the original design values are used to calculate the values in the other two columns.

In NZS4203: 1992 the S_p factor was 0.67 and this was changed to 0.7 in NZS1170.5:2004. Hence the inertial elastic base shear of 8.700 kN translates to $8{,}700 \times {}^{0.7}\!/_{0.67} = 9{,}090$ kN for the current standard. The change in elastic inertial shear increases the corresponding displacements and hence the P-delta shear is increased to 366 kN. As the base shear is 1,800kN this leaves 1,434 kN to resist the inertial shear. The corresponding ductility is given by ${}^{9{,}090}\!/_{1{,}434} = 6.34$.

The drift due to inertial actions increases in proportion to the elastic inertial (μ=1) storey shear, hence this drift becomes 38.7mm. The P-delta drift increases in proportion to the ratio of elastic inertial shears and the ratio of structural ductility factors, and hence it is given by

$$\left(15 \times {}^{9{,}090}\!/_{8{,}700} \times {}^{6.34}\!/_{6}\right) = 16.6 \text{ mm.}$$

Table 4-3: Assessment of existing building

Item	Existing building NZS4203:1992	NZS1170.5: 2004	100%NBS (NZS1170.5:2004)
Inertial shear for μ=1.0, (kN)	8,700 (S_p=0.67)	9,090 (S_p=0.7)	10,500
Structural ductility factor, μ	6.0	6.34	6.0
Inertial design shear (kN)	1,450	1,434	1,750
P-delta shear (kN)	350	366	442
Total shear (kN)	1,800	1,800	2,192
Drift of critical storey (mm)			
Inertial drift (mm)	37	38.7	44.7
P-delta drift	15	16.56	19.1
Total storey drift	52	55.2	63.8
Storey drift times drift modification factor	-	-	95.7

The 100%NBSb values are derived using the maximum permitted structural ductility factor (6.0) and by scaling the values in a similar manner to the way in which the values in column 3 were derived. This inertial base shear is equal to ${}^{10{,}500}\!/_{6} = 1{,}750kN$. The P-delta shear increases in proportion to the elastic inertial shear and hence it becomes 442kN. This gives a total shear force of 2,192kN. The corresponding drifts become 44.7mm for the inertial actions and 19.1mm for

the P-delta actions, giving a total drift of 63.8mm. For design to NZS1170.5: 2004 this drift is multiplied by the drift modification factor of 1.5 (DMF) to give a design drift of 101.5mm, which is equal to 2.70% of the storey height.

The critical limit for the hollow-core floor is when the storey drift divided by the storey height reaches 1.2%. To find the corresponding %NBSb or %NBSa values it is necessary to find the corresponding predicted drift that would occur if the 100% seismic actions were applied to the existing structure. In this analysis as the strength is fixed the structural ductility factor varies from its nominal maximum design value of 6. The process outlined in Section 4.3 and Table 4.1 is followed and it results in a limiting drift limit of 2.9% of the storey height. a structural ductility factor of 7.62 and a storey shear strength of 1,800kN.

In terms of %NBSb;

- for strength $1{,}800/2{,}192 = 82\%$;
- for ductility $6/7.62 = 79\%$
- for drift $1.2/2.9 = 41\%$.

Following the approach set out in Section 4.4 and Table 4.2 the corresponding limits in terms of the design earthquake return factor, *R,* can be found. These values are;

- for strength assuming $\mu = 6$, *R* is 0.94 giving 94%NBSa;
- for ductility *R* is 0.94 giving 94%NBSa;
- for drift *R* is 0.53 giving 53%NBSa.

4.5.3 Example 2: Building designed to NZS3101: 1982 and NZS4203: 1984

In this example the building is assessed on the basis of existing design calculations. This involves a number of approximations, which in general should be adequate for assessment purposes. An alternative, and more exact approach, would be to analyse the building from scratch and factor up or down the design response spectrum by changing the R factor so that the storey shear in the critical storey is equal to the design strength and the calculated storey drift is equal to the safe limit for the hollow-core floor being considered.

The building is square in plan and it is a regular 9 storey structure in which the lateral forces are resisted by ductile perimeter moment resisting reinforced concrete frames. The building is located in Christchurch on deep soil and it has an importance classification of 2. The seismic weight at each level is 6,300kN and the inter-storey height is 3,500mm for all storeys. The critical storey drift in the 3rd storey has been assessed as 1.2% from the assessment criteria given in Chapter 6. The existing design calculations indicate the fundamental period of vibration is 1.5 seconds. The seismic analysis is based on the equivalent static method, which gives a design base for the building of 2,360kN and the maximum inter-storey drift, which is in the third storey, is 25mm. Allowing for torsion due to the design 0.1V offset the design base shear allocated each perimeter frame becomes 1,239kN.

To assess the building in terms of current standards (%NBS) it is necessary to interpret the values given in the original design in terms of current practice. In the design of the building (to NZS4203: 1984) the nominal base shear corresponding to elastic response was divided by $4/S\,M$ where for ductile frames in reinforced concrete S and M both equalled 0.8. The corresponding inter-storey drift was assessed by multiplying the deflection found from the equivalent static

forces by $2/_{SM}$, which for the purpose of calculating drifts is equivalent to the use of an S_p factor of 0.5.

The assessment process described below involves a number of steps, as outlined below. Summaries for each of these steps are given in Table 4.5.

Overall process

The design standards of the time (1980s) made no allowance for the increase in storey strength required to counteract P-delta actions. That is the design storey strengths was based on the actions found from an equivalent static, or modal response spectrum, analysis. The process that is followed is initially to assume the given base shear strength, and the corresponding strengths in the different stories, are available to resist the inertial forces, as given by the equivalent static analysis. The additional P-delta actions corresponding to this assumption are assessed and these values are added to the actions due to the inertial forces. The resultant storey shears are in excess of the provided design strength and hence they are scaled back until they are equal to the provided design strength. This enables the %NBSb to be found in terms of strength, ductility and drift. These values are then used to calculate the design earthquake return factor, R, for the different limiting cases. The detailed steps in the assessment are set out below.

Step 1

The fundamental period of the building in the original calculations was found to be 1.5s. However, this was based on the section properties in use at the time, namely the second moment of area was taken as 0.5 I_{gross} for beams and 1.0 I_{gross} for columns. In NZS3101: 2006 a value of 0.4 I_{gross} was used for beams and the value for columns varies with the axial load level. For a typical 9 storey building it would average out at about 0.48 I_{gross}. A weighed average of these values indicates that using current design standards the stiffness would be 1/1.56 less than in the original design values, see reference (Fenwick, R, and MacRae, G, 2009). Hence deflections need to be increased by a factor of 1.56 and the fundamental period by a factor of $\sqrt{1.56}$, which is equal to 1.25. This indicates that the equivalent 100%NBS fundamental period increases from the value assumed in the design (1.5s) to 1.88 seconds.

The seismic weight of each level in this example is taken as 6,300kN, which gives a total weight of 56,700kN.

The base shear strength in the original design was 2,360kN. The equivalent static base shear for a ductility of 1.0, which corresponds to elastic response, is found by multiplying the design base shear by $4/_{SM}$ where both S and M are equal to 0.8 for ductile concrete moment resisting frames. This gives an elastic base shear of 14,750kN.

From NZS1170.5: 2006 the corresponding elastic (μ = 1.0) base shear force with a fundamental period of 1.88s is 10,100kN. Of this value $0.08V_e$ is applied to the top level and the remaining $0.92V_e$ is distributed to each level in proportion to the height of the level above the base. Based on this distribution of seismic design forces the corresponding storey shear in the 3rd storey for elastic response is 0.939 V_e, which corresponds gives a value of 9,484kN.

The design base shear strength of 2,360kN was based on the use of a strength reduction factor of 0.9 in beams. However, in NZS3101: 2006 the corresponding value is 0.85. Hence in terms of current standards the design base shear due to equivalent static forces is equal to $2{,}360 \times {}^{0.85}/_{0.9} = 2{,}229kN$. The corresponding design shear force in the original design in the 3rd storey is $2{,}360 \times {}^{42}/_{45} = 2{,}203kN$ and the corresponding value in current terms (allowing for the change in strength reduction factors of 0.9 to 0.85) is 2,080kN.

Table 4-4: Assessment of 9 storey building designed to NZS3101:1982 and NZS4203:1984

Step	Item	Existing calculations	Corresponding values to current standards
1	Fundamental period Seismic weight building μ=1 Eq. static base shear 3rd storey 3rd storey shear 3rd storey critical frame Design strength at base At 3rd storey design strength on critical frame	1.5s 9 x 6,300kN = 56.700kN 6.25 x 1,360 = 14,750kN (42/45) x 14.750 = 13,770kN (13,770 x 1.05)/2 = 7,229kN 2,360kN 2360 x 42/45 = 2,203kN (1.05x 2,203)/2 = 1,157kN	1.5 x 1.25 = 1.88s 56,700kN 10,100kN 0.939 x 10,100 = 9,484kN (9,484 x 1.05)/2 = 4,979kN 2360 x 0.85/0.9 = 2,229kN 2203 x 0.85/0.9 = 2,080kN (1.05 x 2080)/2 = 1,092kN
2	**3rd storey inter-storey drift due to Eq. static forces for ULS at;** perimeter frame centre of mass Elastic limit at perimeter frame At centre of mass Storey drift elastic response, μ=1 At perimeter frame At centre of mass	 25mm 23.8 25/(2/SM) = 8mm 7.62mm - -	 $8\times\left(4{,}979/1{,}092\right)\times 1.56\times 0.85 = 48.4mm$ 46.1mm
3	**P-delta shears, 3rd storey** Axial load 3rd storey Design P-delta shear on 3rd storey for μ ≥ 3.5 Design P-delta shear on critical perimeter frame	7 x 6300= 44,100kN	44,100kN $\beta K = 2.0$ $\beta K \times 44{,}100 \times (46.1/3{,}500) = 1{,}162kN$ (1,162/2) = 581kN
4	Storey drift due to P-delta design shear of 1,162kN		$46.1 \times \left(1{,}162/2{,}080\right) = 25.7mm$
5	**Resultant actions** 3rd storey shear strength, equivalent static plus P-delta in critical frame Structural ductility factor, μ 3rd storey drift with drift modification factor (1.5)	 1,157kN	 1,092 + 581 = 1,673kN μ = 4,979/1,092 = 4.56 1.5 x (48.4 + 25.7) = 111.2mm
6	Scale back Eq. static + P-delta in 3rd floor shear to equal design strength to find %NBS		%NBS Strength 65% Structural ductility factor 62% Drift 27%
7	Find return factor and return period for design earthquake for; • Strength • Structural ductility factor • Drift		R Years • Strength 0.77, 175 • Ductility 0.77 175 • Drift 0.46 85

Step 2

In the 3rd storey the original calculation of the maximum drift in the critical perimeter frame was 25mm and the corresponding value at the centre of mass (centre of building) was 23.8mm. These values were found by multiplying the storey drift found in the equivalent static analysis by $2/SM$, which is equal to 3.125 and hence the elastic equivalent static drift is 8mm in the perimeter frame and 7.62mm at the centre of mass. These values correspond to a storey shear force of 2,080kN. The storey drift corresponding to elastic response (for μ = 1.0) in the building assessed by current

standards can be found for both the critical perimeter frame and the centre of mass. The critical drift for the perimeter frame is found by multiplying 8mm from the original design by;

- The elastic response storey shear (9,484kN) divided by the design storey shear (2,080kN), which corresponds to the structural ductility factor;
- The factor of 1.56, which allows for the change in the way in which stiffness properties were assessed;
- The factor of 0.85 to allow for the term in NZS1170.5: 2004, clause 6.2.3, which recognises that the equivalent static method over predicts the storey drifts.

The resulting drift is 48.4mm and the corresponding value at the centre of mass is 46.1mm.

Step 3

In this step the storey shear strength required to balance P-delta actions in the 3rd storey is calculated assuming if the design strength of 2,080kN is balancing the storey shear due to inertial actions, which in this case are given by the equivalent static method.

Where points of inflection occur in the columns of the storey being considered and in adjacent storeys (above and below this level) a simple approximation may be used to calculate the storey drift associated with P-delta actions. The basis of this approximation is that both the equivalent static and P-delta storey drifts are approximately proportional to their respective magnitudes of the storey shear force.

The design for P-delta actions given in NZS1170.5: 2004 is based on a set of lateral forces, which are derived from the axial loads acting on each storey and the inter-storey drift associated with the inertial forces at the centre of mass of each level. As illustrated in Figure 4-2, if the storey drift due to the inertial forces is known the associated static P-delta shear force, which acts on the lateral force resisting structural elements, can be found. This static P-delta shear force ignores the additional drift that occurs due to the P-delta moments and repeated cycles of inelastic loading. To allow for these actions the static P-delta shear is multiplied by βK (see NZS1170.5: 2004, clause 6.5.4.2), which has a value of 2 for T_1<2s and for $\mu > 3.5$. This gives a total P-delta design shear for the lateral force resisting frames of $\left(2 \times 44{,}100 \times {}^{46.1}\!/_{3{,}500}\right) = 1{,}162kN$. Half of this P-delta shear goes to each of the two perimeter frames resisting shear in the direction being considered. This gives a shear force of 581kN for the critical frame.

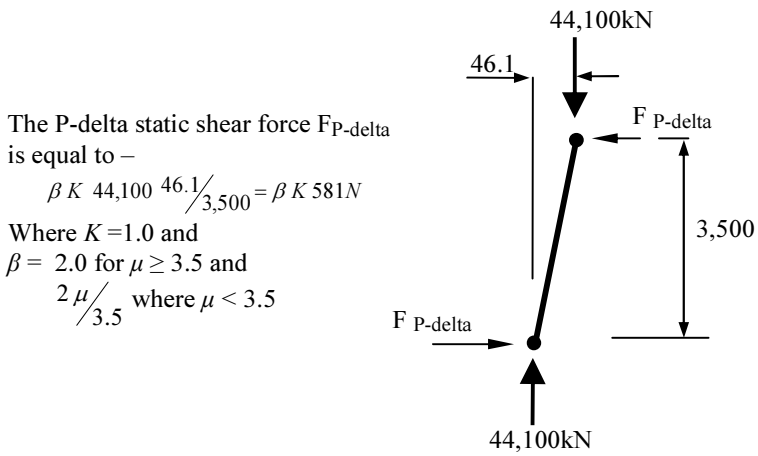

Figure 4-2: Calculation of static P-delta shear in 3rd storey

Step 4

Based on the assumption that drift is proportional to the storey shear force, the drift due to P-delta actions is equal to $46.1 \times {}^{1,162}\!/_{2,020} = 25.7$ mm, where 46.1mm is the drift due to the inertial shear force of 2020kN at the centre of mass and 1,162 is the shear force due to P-delta actions.

Step 5

The required storey design shear strength (neglecting torsional effects) is equal to (2,080 + 1,162), which is equal to 3,243kN. The corresponding structural ductility factor is equal to the equivalent static storey shear for $\mu = 1$ divided by the storey shear balancing the equivalent static forces. Hence the structural ductility factor, μ, is given by $\mu = {}^{9,484}\!/_{2,080} = 4.56$.

The design storey drift for a design storey shear strength of 3,243kN and a structural ductility factor of 4.56 is 1.5 x (48.4 + 25.7) = 111.2mm, where 48.4 is the drift of the critical perimeter frame and 1.5 is the drift modification factor for a building with a height in excess of 30m, see NZS 1170.5: 2004, clause 7.3.1.1.

Step 6

The values given in Table 4.5 which are based on the assumption that the provided strength was available to resist inertial actions are entered in bold in Table 4.6. In this step these values are used to find the response when the combined P-delta and inertial storey shears in the critical frame are reduced to equal the provided design strength.

Table 4-5: Modify performance for reduction in design strength

Inertia μ=1.0 Shear (kN)	Design shear In frame (kN)	Ductility Factor ** μ	Inertial response Shear (kN)	Inertial response Drift (mm)	P-delta actions Shear (kN)	P-delta actions Drift (mm)	Total Drift (mm)	Total drift x DMF* (mm)	Storey Drift %
4,979	**1,673**	**4.56**	**1,092**	**48.4**	**581**	**25.7**	**74.1**	**111.2**	**3.18**
4,979	1,092	9.74	511	48.4	581	54.9	103.3	154.9	4.42

* DMF drift modification factor equal to 1.5 for μ > 3.5.
** Structural ductility factor

Changing the structural ductility factor reduces the inertial design shear force but it does not change the drift due to inertial actions. Consequently as the resultant deflected shape envelope is not changed the P-delta forces are not altered. Hence if the design storey-shear strength is equal to 1,092kN the strength available to resist inertial actions is 1,092kN minus the P-delta shear force of 581, which gives a value of 511 kN. The structural ductility factor can be found by dividing the elastically responding (μ =1) inertial storey shear force, which is 4,979kN, by the available design strength for inertial actions, which is 511 kN. This gives a structural ductility factor of 9.74.

The drift due to P-delta actions is proportional to the structural ductility factor. Hence the revised P-delta storey drift becomes $27.5 \times {}^{9.74}\!/_{4.56} = 54.9$ mm. Adding this drift to the 48.4mm due to inertial actions gives a total drift of 103.3mm. The critical design inter-storey drift becomes 103.3 times the drift modification factor of 1.5, which gives 154.9 mm and a critical inter-storey drift divided by inter-storey height of 4.43%.

In terms of percent of NBSb the relevant values are;

- for strength $1{,}092/1{,}673 = 65\%$;
- for structural ductility factor $6/9.74 = 62\%$;
- for inter-storey drift $1.2/4.43 = 27\%$.

Step 7

In this step the critical return factors are calculated following the process described in 4.4 under *Calculation of earthquake return factors* and Table 4.2.

The resultant values of return factor and design earthquake return period are;

- for strength the return factor is 0.77, which corresponds to 77%NBS;
- for ductility the return factor is 0.77, which corresponds to 77%NBS;
- for inter-storey drift return factor is 0.46. which corresponds to 46%NBS

4.5.4 Example 3; Wall Building designed to NZS3101: 1982 and NZS4203: 1976

This is assumed to be a square building of 9 storeys with two walls on each side, which are supported by rigid foundations. The importance classification is 2 giving a return earthquake factor R equal to 1.0 for 100%NBS. The seismic weight of each level is 1,600kN and the storey height is constant at 3.4m. In the design flexural cracking was assumed to reduce the effective section properties of the wall to 0.75 times values based on gross section properties (NZS3101: 1982) suggested values of 0.5 for beams and 1.0 for columns). Based on these assumptions the fundamental period in the original design was calculated as 0.45 seconds.

The critical inter-storey drift for the critical hollow-core floor has been assessed from the criteria in Chapter 6 as a drift of 1.5% of storey height.

In terms of the building standards of the early 1980s the assumptions above for seismic zone B gave a design seismic base shear of 1,510kN and a fundamental period of 0.45 seconds. The limiting inter-storey drift was just over the then limit of 1% in the upper-storey of the building. The corresponding base moment on the two walls was 36,200kNm (18,100kNm on each wall).

In terms of current standards the effective section properties are taken as 0.34 times values based on gross sections. On this basis the fundamental period is 0.67 seconds and the corresponding base shear force to resist inertial actions is 1,140kN based on a structural ductility factor of 5 (NZS3101: 2006). The base shear moment acting on the two walls corresponds to 25,400kNm for inertial actions and 2,700kNm P-delta actions. Correcting the design base shear strength for the change in strength reduction factor of 0.9 to 0.85 gives a design flexural strength at the base of the walls of 32,580kNm. With this value the structural ductility factor could be reduced from 5 to close to 4.3. With the modified structural ductility factor the critical inter-storey deflection without the drift modification factor becomes 81mm for inertial actions plus a further 14mm for P-delta actions. Note, where as P-delta actions are small clause 6.5.2 in NZS1170.5 allows these actions to be neglected. With the drift modification factor the design inter-storey drift becomes 143mm, or 4.2%. It should be noted that in this case the limiting drift profile of the building is given by clause 7.2.1.1 (b) (ii) in NZS1170.5. This profile also defines the P-delta actions, which are relatively small for structural wall buildings.

Hence in terms of New Building Standards;

- For strength >100%NBSb;
- For ductility >100%;NBSb;

- For drift 36%NBSb.

In terms of the return factor for drift the corresponding value of R is 0.38 giving %NBSa of 38%.

References

Fenwick, R, and MacRae, G, 2009, *"Comparison of New Zealand Standards used for Seismic Design of Concrete Buildings"*, Bulletin of NZSEE, Vol. 42 No.3, September.

Chapter 5

Potential Failure Modes Associated with Hollow-core Floors and Seismic Actions

5.1 Introduction

In the last decade much has been learnt about the performance of hollow-core floors and this is reflected in the provisions in the current Structural Concrete Standard (NZS3101: 2006 with Amendment 2). This chapter is intended to give a broad over-view of potential problems associated with seismic performance of hollow-core floors in multi-storey buildings. It contains;

- A brief comparison of the detailing of hollow-core floors, as specified by the Structural Concrete Standard, with practice based on earlier editions of the Standard. Problems that may arise where the detailing falls short of currently accepted practice are briefly described (Section 5.2);
- An overview of different failure modes associated with hollow-core floors (Sections 5.3, 5.4 and 5.5).

More detailed information on assessment of hollow-core floors is given in Chapter 6 and on the design of new hollow-core floors in Chapter 7. Appendix A contains details of research that has been used to develop the assessment/design criteria given in Chapters 6 and 7.

In assessing a hollow-core floor for seismic actions there are three different general aspects that need to be considered. The first aspect involves assessing the influence of the floor on the performance of the structure as a whole. This arises as the interaction of precast prestressed units with beams can in some cases increase the flexural strength of the beams to the extent that a non-ductile failure mechanism may develop in preference to the planned ductile failure mechanism. This aspect is considered in Section 5.3. The second general aspect involves checking for a series of potential failure modes each of which may result in collapse of the floor. These failure modes include;

1. Loss of support due to spalling of concrete and movement of precast units relative to their supporting structure;
2. Positive moment failure of precast units close to the supports;
3. Negative moment failure of precast units near the supports;
4. Diagonal tension failure in negative moment region close to the support points;
5. Incompatible displacements between hollow-core units and adjacent structural members;
6. Torsional actions associated with twisting of units due to deformation of supporting structure.

The potential failure mechanisms listed above are briefly outlined in Section 5.4.

The third general aspect that should be considered is the influence of the development of wide cracks and local damage in a floor slab on its ability to act as a diaphragm. This aspect is considered in Section 5.5.

5.2 Recommended detailing and previously used details at supports of hollow-core floors and adjacent to other structural elements

Figures 5-1, 5-2 and 5-3 illustrate current recommended practice and compare this with previous practice used in detailing hollow-core floors. Different aspects of detailing are identified by numbers, which refer to Table 1, where these aspects are further described. The reason for changing detailing practice is also briefly outlined in the Table.

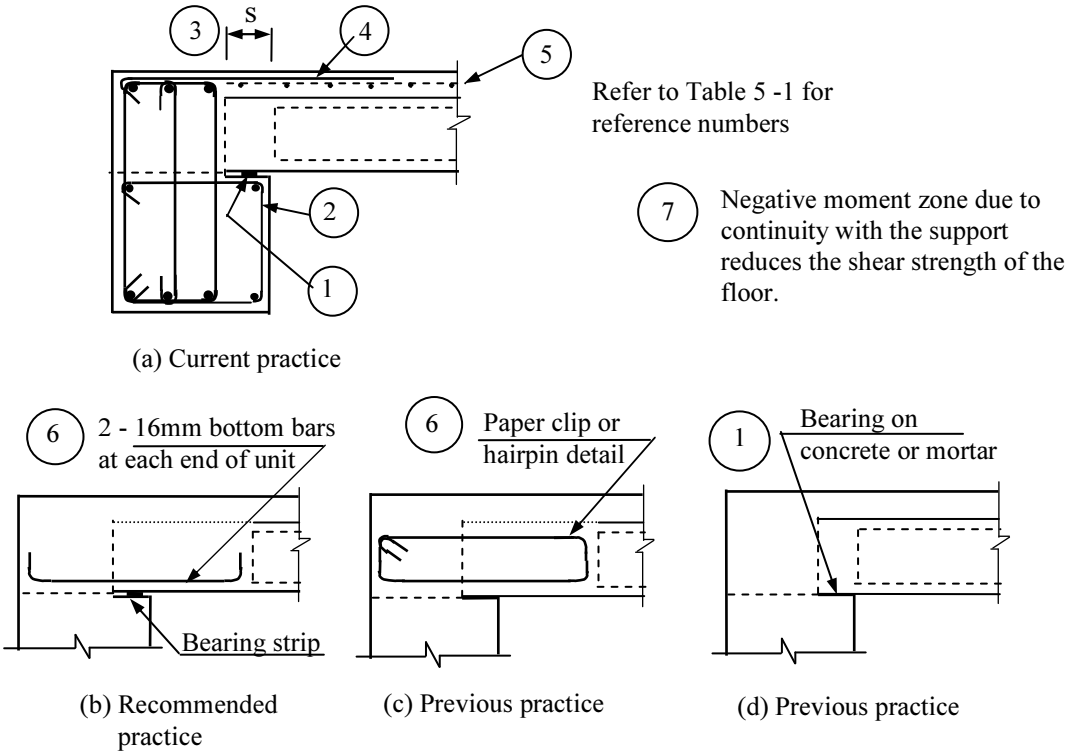

Figure 5-1: Current and previous support details

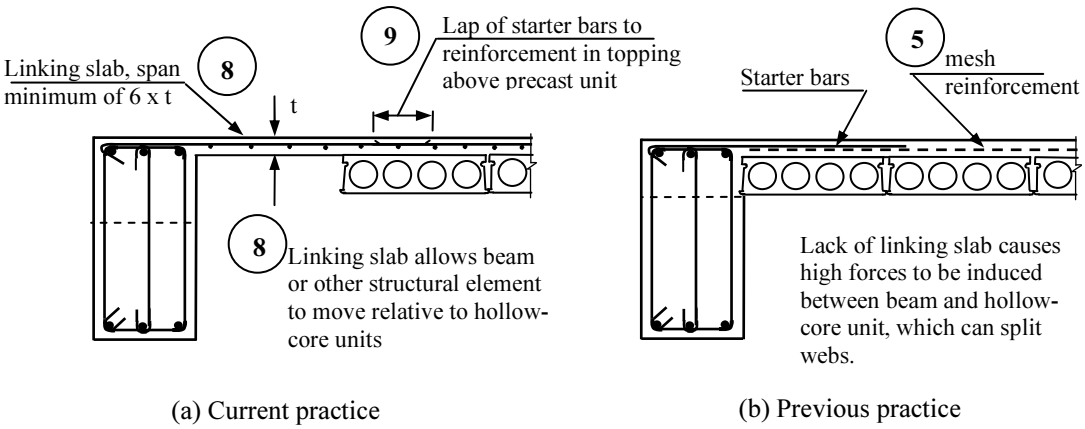

Figure 5-2: Current and previous practice at junction between beams, or other structural elements, and hollow-core units

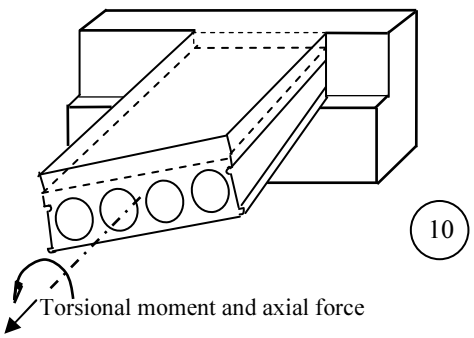

Figure 5-3: Torsional actions imposed due to differential deflection of supporting structure

Table 5.1: Detailing practice near supports and adjacent to other structural elements

Reference In Fig.[1]	Text[2]	Recommended practice	Previous practice	Consequences of previous practice
5.1–1	5.4.1	Use low friction bearing strip under hollow-core.	Mount hollow-core unit direct on concrete ledge or on a mortar pad.	Friction between hollow-core unit and support may increase the likelihood of a positive moment flexural crack forming in the units close to the support and of spalling from the support ledge.
5.1–2	5.4.1	Support ledge reinforced to tie it into support beam.	Some times the hollow-core unit was supported on cover concrete.	Spalling from support ledges may occur due to; loss of cover concrete in plastic hinge zones; bond cracking associated with longitudinal beam bars; prying action of precast units on support ledge.
5.1–3	5.4.1	Contact length between hollow-core and ledge to be length for construction tolerance plus the larger of; 75mm, span / 180 or $0.038h_b$ plus length required for bearing for$1{,}500 < h_b < 2{,}500$.	NZS3101: 1995 required contact length greater than the larger of 50mm or span /180*. In earlier Standards no recommended contact lengths were given.	Contact length less than current recommended practice may cause premature loss of support due to spalling and relative movement of hollow-core units to supporting structure.
5.1–4	5.4.3	Starter bars must be extended to cover maximum negative moments induced near supports.	No guidance given on necessary extension of starter reinforcement.	Cutting of the starter bars short can result in a negative moment failure of the hollow-core floor.
5.1–5 5.2-5	5.4.3	Topping concrete to be reinforced with deformed reinforcing bars. Mesh should not be used (this includes ductile mesh).	Topping concrete generally reinforced with mesh.	The mesh has a low ductility, which can cause brittle failure in negative moments or in transmitting diaphragm forces.
5.1–6	5.4.2	Two cells broken out at each end, filled with concrete and reinforced with a plain round 16mm bar in the bottom of each cell.	Where a support length appears to be inadequate two or more cells were broken out and reinforced with paper clip or hairpin form of reinforcement.	The use of paper clip reinforcement increases the likelihood of a negative moment flexural failure at the end of the paper clip bars or where starter bars are terminated.
5.1–7	5.4.4.	Shear strength in negative moment zone checked as required by NZS 3101: 2006	Shear strength assumed to be adequate if it satisfied gravity loading conditions acting as a simply supported member.	Negative moments and axial tension induced in hollow-core floor due to elongation etc reduce the shear strength of the hollow-core units.
5.2–8	5.4.5	Linking slabs required to reduce forces induced in hollow-core units due to relative vertical movement of adjacent structural elements.	No linking slab provided.	Relatively small differential vertical movements between a hollow-core unit and an adjacent structural element causes webs to split, eventually allowing bottom half of unit to fail.
5.2–9	5.4.3	Starter bars lap reinforcing bars in topping above hollow-core units.	Starter bars lap mesh.	At the end of the starter bars there is a sharp drop in negative moment flexural strength.
5.3–10	5.4.6	Assess torsion due to differential displacement of supports.	No guidance given.	Differential displacement of supports can induce torsion in hollow-core units. As these contain no torsional reinforcement this may lead to torsional failure.

* Note this is in addition to construction tolerance
[1] Refers to reference number on Figure 1, number 1
[2] Refers to section in this report

Table continued on next page.

Table 5.1: Continued

Reference In Fig.[1]	Text[2]	Recommended practice	Previous practice	Consequences of previous practice
5.4-11 5.4-12 5.4-13	5.3	Calculate flexural over-strengths of beams as set out in NZS 3101: 2006 with Amendment 2	In Structural Concrete Standards prior to NZS 3101: 2006 the width of flange that contributed to over strength was under-estimated and the contribution of prestressed units to strength was neglected.	The under assessment of beam over strengths could result in the formation of a non ductile failure mechanism such as; • A column sway mode; • Shear failure of a beam; • Failure of a beam due to plastic deformation developing in a region not detailed for ductility.
5.15	5.5	Design for transfer of forces in floor by strut and tie analysis, but ensuring compression struts do not cross wide cracks in floor.	Design for transfer of forces to lateral force resisting elements by strut and tie analysis (or other method), but ignoring effect of cracks at boundary to floor on compression struts.	As cracks open up between floor and other structural elements the lateral transfer mechanism assumed in design is lost. The consequences of the loss of capacity need to be assessed.

5.3 Non ductile failure mode of structure due to interaction of precast prestressed units with beams

Large scale structural tests, which have been carried out since 2000, have shown that the interaction of prestressed precast floor units with beams is considerably greater than assumed in editions of the Structural Concrete Standard prior to 2006, that is NZS 3101: 1995 and 1982 [1, 2 and 3]. Tests have shown that in some cases the inter-action of the floor with a beam may double the negative moment capacity of a beam [1 and 2]. Prior to 1982 no information was given on the inter-action on floor slabs with beams. Hence, buildings designed using these standards may have beams with over-strengths considerably greater than those calculated in the original design. As illustrated in Figure 5-4 this may lead to the formation of non-ductile failure modes developing in a major earthquake instead of the intended ductile failure mode.

Non ductile failure modes may take the form of;

- A column sway mode forming instead of a ductile beam sway mechanism;
- A shear failure in the beams due to the increased shear force associated with the higher over-strength bending moments;
- The formation of plastic hinges in regions where bars are terminated and/or in regions not detailed for ductility. This may arise due to the change in shape of the bending moments acting on the beam.

5.4 Potential failure modes in hollow-core floors

This section contains brief descriptions of the different potential failure modes of hollow-core floors that may arise in a major earthquake.

5.4.1 Loss of support

In assessing an existing hollow-core floor for loss of support two aspects need to be considered, namely;

(a) Loss of support due to spalling of concrete near the front face of the support ledge and near the back face of the hollow-core units together with movement of the hollow-core units relative to the support.

(b) Loss of support due to failure of an un-reinforced, or inadequately reinforced, supporting ledge. This may occur due to structural actions in the supporting element and prying action of hollow-core units on the support ledge.

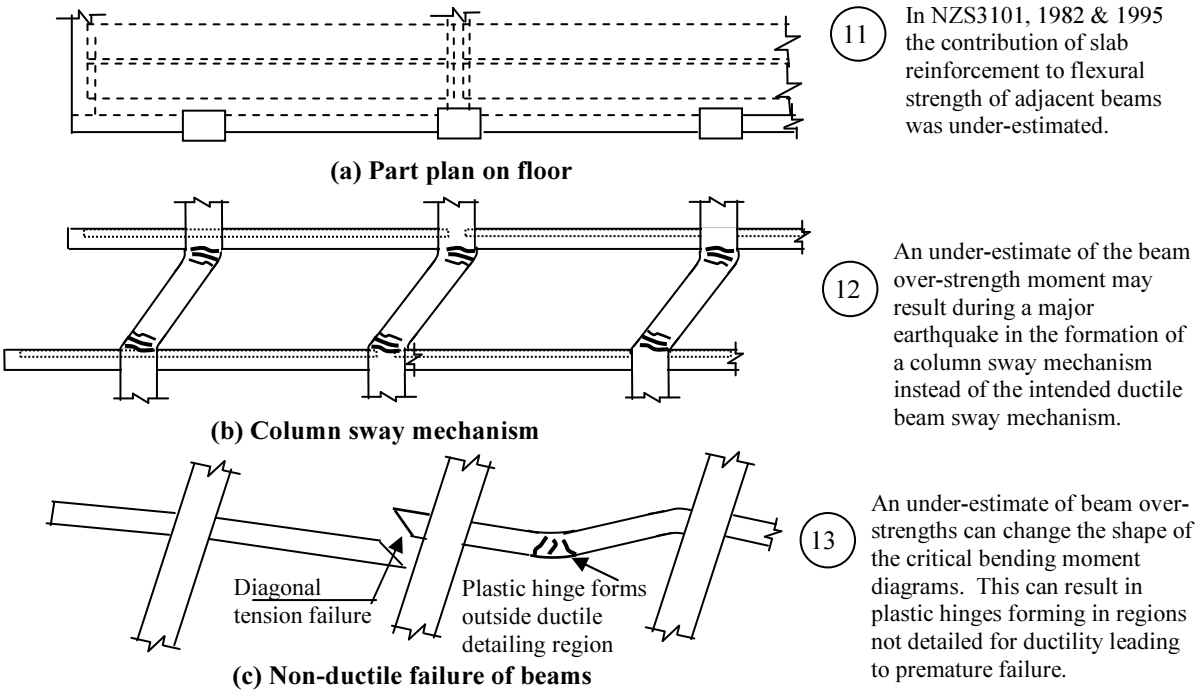

Figure 5-4: Non ductile failure due to under-estimate of beam over-strength

In case (a) loss of support may arise where the bearing length between the hollow-core unit and the supporting ledge is too short to accommodate;

- Construction tolerance [4];
- Movement of the hollow-core unit away from its support due to creep, shrinkage and thermal contraction of the unit;
- Spalling of concrete from the front face of the ledge and the back face of the hollow-core unit due to rotation of the unit relative to the supporting structure. This rotation occurs when a building sways in an earthquake or a strong wind [5];
- Movement of the support away from the hollow-core units due to elongation of plastic hinges in beams that are parallel to the direction of the span of the units together with displacement associated with rotation of the supporting structure [6]. This situation is illustrated in Figure 5-5.

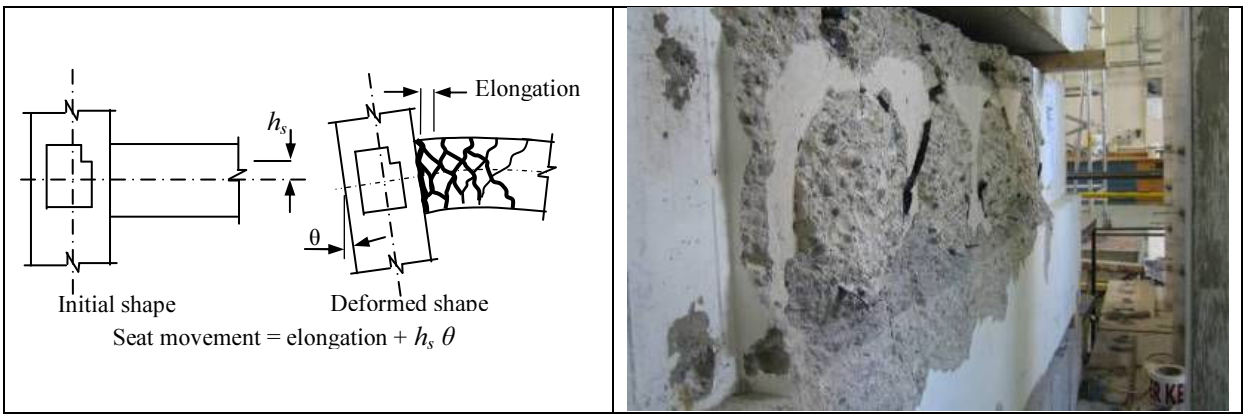

Figure 5-5: Movement of support due to elongation and rotation of supporting beam and spalling of concrete from back of hollow-core unit and front of support ledge (Photo from reference 7)

In case (b) spalling may occur where the supporting ledge is not tied into the beam with adequately anchored reinforcement, see Figure 5-6. Spalling of the cover concrete or inadequately reinforced

supporting ledge may occur due to crushing of concrete in a plastic hinge zone, by prying action of hollow-core units and due to the development of bond cracks associated with flexural tension reinforcement in support beams [8], see Figure 5-7.

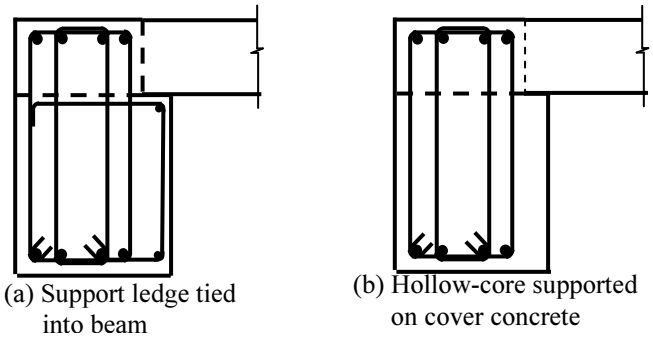

Figure 5-6: Support on cover concrete or on concrete ledge tied into the supporting element

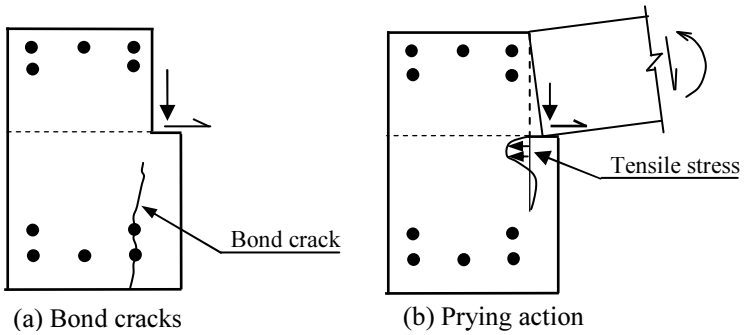

Figure 5-7: Bond cracks and tensile stresses due to prying action of hollow-core units

5.4.2 Positive moment failure near support

Positive moment flexural cracks may form either at the back of the hollow-core unit, which is shown as at position 2 in Figure 5-8, or more critically at the face of in filled concrete in the core that is shown as position 1, which is at section A - A in Figure 5-8.

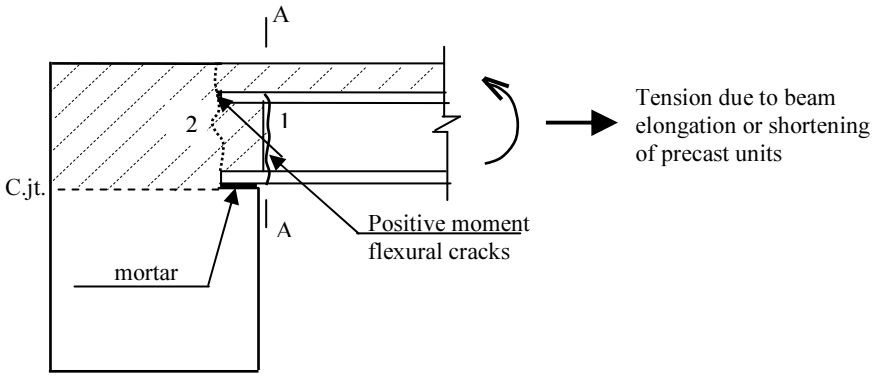

Figure 5-8: Positive moment cracking adjacent to support

The problem of positive moment failure occurs when a flexural crack forms at the face of the in filled concrete in the core of the hollow-core unit. For this crack to form the section A-A must be weaker than the section at the back of the hollow-core unit. The flexural strength of section A-A depends on the tensile strength of the precast concrete as the pretension strands are too close to the end of the units to be effective in resisting tension. Positive moment flexural cracks in the critical location are more likely to occur where the units are mounted on mortar and or where the strength of the insitu concrete is relatively high. Such cracks have been observed to form in several tests [9 and 10] at inter-storey drifts of less than 0.5%, which is within the range of elastic response of many structures. The formation of one of these cracks creates a weak section. Consequently, any further shrinkage of the unit or movement of the supporting beam due to elongation and rotation of supports results in opening of the crack. This can lead to collapse as the reaction is transferred to the insitu concrete above the

precast unit, which has been observed to result in it pealing off the hollow-core unit [7], see Figure 5-9.

Figure 5-9: Positive moment failure of hollow-core unit (Photo from reference 7)

Positive moment flexural failures are unlikely to occur where cells in hollow-core units have been broken out, adequately reinforced and filled with concrete.

5.4.3 Negative moment failure near support

Negative moment flexural failure in hollow-core floors can occur under seismic conditions where starter reinforcement (continuity reinforcement), which joins the floor to the supporting structure, is terminated too close the support. Generally in the past the starter bars have been extended for a distance of 400 to 1,500mm into the floor to lap mesh reinforcement [11]. The situation is illustrated in Figure 5-10. At the location where the starter bars are terminated there is a sharp drop in the negative moment strength. If this position is too close to the supports negative moment failure may occur. As the mesh is inherently brittle (whether ductile mesh or not (see 7.3.1)) the strain that it can sustain before snapping is limited. In addition due to the low proportion of reinforcement secondary cracks cannot develop and this further limits ductility. As a consequence, standard flexural theory that,

- neglects tension stiffening of concrete, and
- assumes the extreme fibre strain in concrete in compression are equal to 0.003,

is not applicable.

Negative moment flexural tension failures have been observed in tests reported in references [11, 12 and 7].

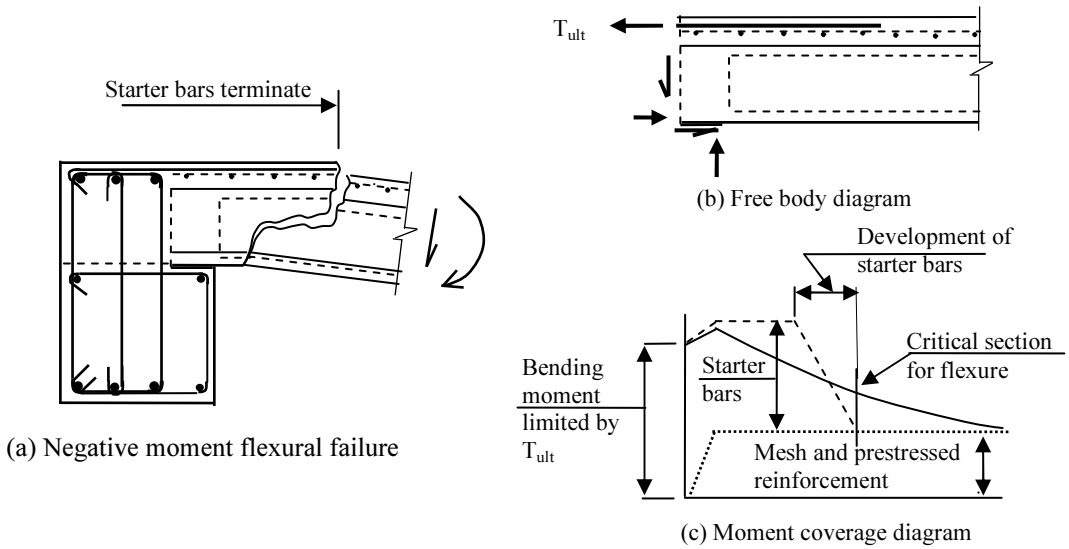

Figure 5-10: Negative moment flexural strength

5.4.4 Shear strength in negative moment regions

In simply supported pretensioned members without web reinforcement, such as in New Zealand hollow-core units, the shear strength in the high shear region close to the supports is limited by web shear cracking. However, where continuity is established between precast prestressed units and the supporting structure axial tension and negative moments can be introduced into the region located near the supports, see Figure 5-11. In this situation the shear strength is limited by flexural shear cracking, which results in the shear strength being appreciably less than the value corresponding to web shear cracking strength [13]. Consequently shear strength cannot be based on tests or analytical calculations of simply supported members. Hollow-core units are generally designed to act as simply supported members and consequently in general the precaster will have designed the shear strength on this basis. The assumption of simple supports leads to an over-estimate of the shear strength in the presence of continuity actions.

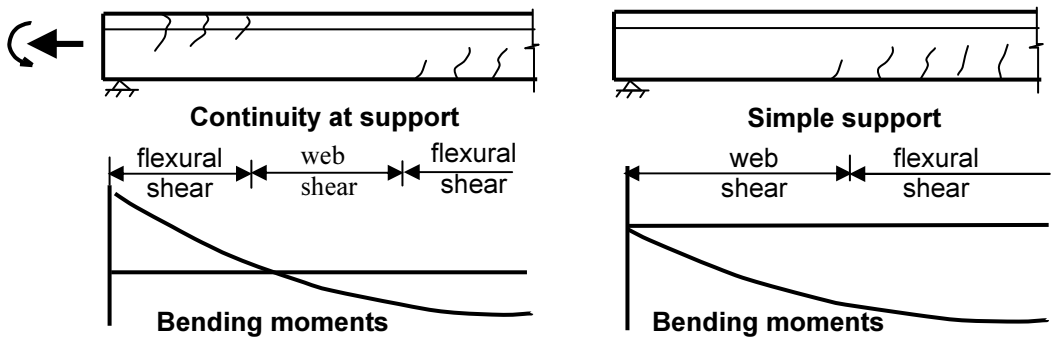

Figure 5-11: Flexural and web shear limits on shear strength of concrete

5.4.5 Incompatible displacements between hollow-core units and adjacent structural members

In 2004 an amendment to NZS3101: 1995 required a flexible linking slab to be used between hollow-core floors and adjacent structural elements to allow relative displacements to occur between the two, see Figure 5-2. This requirement was maintained in NZS3101: 2006. Linking slabs limit the force in the vertical direction that can be transmitted between structural elements and adjacent hollow-core units. Tests have shown that without this flexible slab high forces are transmitted to the hollow-core units and splitting of the webs can result [9], see Figures 5-12 and 5-13.

Hollow-core floors designed before 2004 generally do not have linking slabs. Consequently it is important to check the extent of web cracking that would be induced by differential displacement to determine if retrofit is required to ensure adequate seismic performance of the floor.

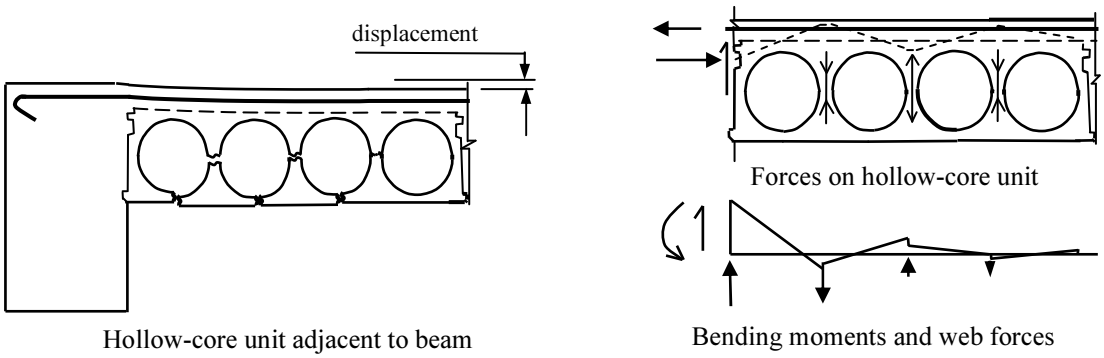

Actions induced by differential displacement between hollow-core unit and an adjacent beam or other structural element

Figure 5-12: Differential displacement between a floor and an adjacent beam

There are a number of situations that are particularly critical in that high differential displacements can be expected to arise due to seismic actions. One of these situations is where hollow-core units are used in a floor in a moment resisting frame building that does not have corner columns, see Figure 5-14 (a). A second situation is where hollow-core units are located close to an eccentrically braced bay in a

structural steel frame, see Figure 5-14 (b). Further situations occur where hollow-core units are supported at one or both ends on a pair of closely placed structural walls, or where hollow-core units span past a structural wall. It should be noted that even hollow-core units in a single bay that are simply supported at each end can be damaged with extensive web splitting occurring due to the differential displacement between the unit and an adjacent beam that develops a plastic hinge.

Figure 5-13: Splitting of webs due to differential displacement between a beam and adjacent hollow-core unit (Photo from reference 9)

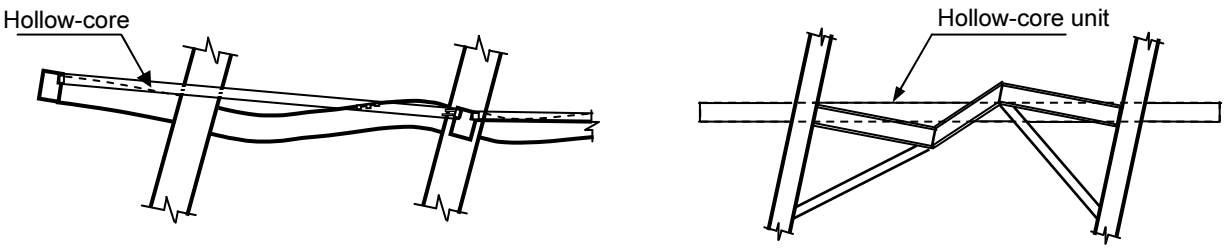

(a) Hollow-core units in a frame building without a corner column

(b) Hollow-core unit adjacent to eccentrically braced bay

Figure 5-14: Major differential displacements between hollow-core units and some other structural elements

5.4.6 Torsional failure of hollow-core units

Hollow-core units contain no transverse reinforcement in the soffit concrete below the cells and no web reinforcement, consequently their dependable performance in torsion is limited to actions that they can resist before torsional cracking occurs. Once torsional cracking develops torsional resistance decreases rapidly. In addition this torsional cracking reduces the flexural and shear strengths [14 and 15]. Hollow-core units act in torsion in a manner that is similar to a box section and their performance can be assessed by codified criteria up to the load stage where torsional cracking occurs. Standard theory in NZS3101: 2006 with Amendment 2 [13] can be used for this purpose.

Torsional cracking of hollow-core members may be induced where deformation of the supporting structure induces a twist along the hollow-core member, see Figure 5-3. There are many situations where this can arise, such as the cases where one end of a unit is supported on a beam, which remains relatively straight as the building sways in an earthquake, while the other end is supported by;

- A slender structural wall;
- A cantilever beam in a frame that does not have a corner column such as is shown in Figure 5-14 (a) or by a steel beam in a bay which is eccentrically braced, see Figure 5-14 (b), or a reinforced concrete beam designed to deform in shear, such as occurs in diagonally reinforced coupling beams linking structural walls, and in many other situations.

As hollow-core units act like box sections, which are stiff in torsion, the twisting deformation that they can sustain without cracking is limited.

5.5 Diaphragm actions in floor slabs

Structural tests of floors have shown that prestressed components in the floor effectively reinforce blocks of the floor and concentrate any movement into cracks, which open up at the weak section between the floor and supporting structural elements [3, 9, 16 and 17]. Where beams may form plastic hinges in a major earthquake elongation within the plastic hinges can create wide cracks by pushing the beams or other structural components supporting precast floor units apart. This can lead to the formation of wide cracks around the perimeter of bays of floor slabs containing prestressed precast units, see Figure 5-15.

There are several aspects, described in the following paragraphs, which should be considered in relation to the influence these cracks may have on the performance of the floor as a diaphragm.

It has been common practice to design diaphragms to transmit shear forces to lateral force resisting elements using the strut and tie method. Generally the struts have been assumed to apply compression forces through the topping concrete direct onto columns. However, wide cracks have been observed to develop around columns, which have ductile beams framing into them, in several tests [1, 9, 16 and 17]. These cracks disrupt the potential path of any compression strut force, which is required from a strut and tie analysis, thus invalidating basic assumption in the design. see Figure 5-15.

Tests have shown that a wide crack does not develop where a linking slab is located between the first precast unit and a column in a perimeter frame provided that it does not have a transverse beam framing into it and provided the column is tied into the floor with reinforcement that can sustain the tension force given in NZS 3101; 2006, clause 10.3.6 [16], see Figure 5-15 (c).

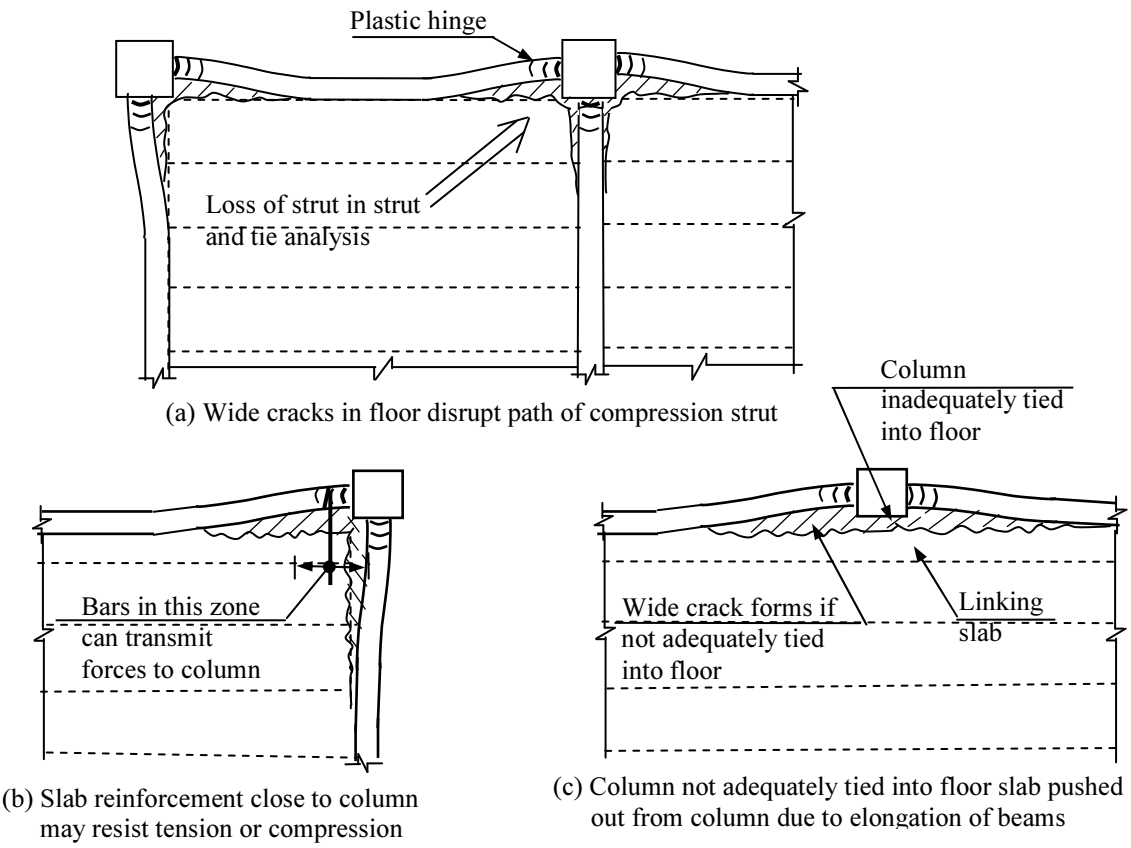

Figure 5-15: Influence of potential cracks on diaphragm action of floor

Where the linking slab has been omitted, the zone of the floor close to the column is likely to be severely damaged due to differential movement between floor and column [1 and 9]. This damage will destroy any assumed strut force designed to cross this zone. The effect of losing this strut and tie action on the structure should be assessed. In making an assessment of an existing floor it is important to determine if the full design transfer shear force in the diaphragm is required. Often in design the diaphragm forces in floors have been assessed on the basis that the floor was either rigid or very stiff. The formation of the cracks near the columns reduces this stiffness. This can have two effects. Firstly

the reduction in stiffness can reduce higher mode effects on the floor, which generally significantly reduces the required diaphragm shear forces associated with inertial forces. Secondly the loss of stiffness can result in redistribution of structural actions, which can also result in a further reduction in the magnitude of design diaphragm forces where these actions are associated with shear transfer between lateral force resisting elements.

A simple approach for transfer diaphragms is to assess how much deformation would be applied to a diaphragm if the diaphragm stiffness was reduced to zero. If the result is only a few mm from the connected structure the redistribution can occur and no retro-fit is required. Alternatively the influence of allowing some reduction in stiffness on the magnitude of redistribution may be assessed. It should be noted that some diaphragm action can be maintained by continuity reinforcement close to the columns sustaining forces across the cracks by acting in tension, or to a limited extent in compression, as shown in Figure 5-15, and by shear transfer between the floor and beams in zones where the continuity reinforcement in the concrete topping does not yield.

Where columns are not tied into a floor slab by a beam, as in Figure 5-15 (c), elongation can push the column out from the floor. If this occurs over several levels premature failure may occur in buckling, and retrofit may be required to prevent this.

References

1 Fenwick RC, Davidson BJ, Lau DBN, 2005. *Interaction Between Ductile RC Perimeter Frames and Floor Slabs Containing Precast Units*. NZSEE Conference, Wairekei, March, Paper No. 23.

2 Fenwick R, Bull D, MacPherson C, Lindsay R, 2006. *The Influence of Diaphragms on Strength of Beams*. NZSEE Conference, Napier, March, Paper No. 21

3 Peng, Brian, Hsuan-Hsien, July 2009 "Seismic Performance Assessment of reinforced Concrete Buildings with Precast Concrete Floor Systems", PhD Thesis, Dept. of Civil and Natural Resources, University of Canterbury

4 NZCS and NZSEE Study Group, 1999, *"Guidelines for Structural use of Structural Precast Concrete in Buildings"*, Second edition, Centre for Advanced Engineering, University of Canterbury, p143

5 Jensen JP, Bull DK, Pampanin S, 2007. *Experimental Investigation of Existing Hollow-core Seating Connection Seismic Behaviour Pre and Post Retrofit Intervention*. In Proceedings, New Zealand Society for Earthquake Engineering Conference, Palmerston North, New Zealand.

6 Fenwick R. C, Megget L. M, 1993. *"Elongation and Load Deflection Characteristics of Reinforced Concrete Members Containing Plastic Hinges"*, Bulletin NZ National Society for Earthquake Engineering 26(1): March, pp 28–41

7 Jensen, J., 2006, "*Experimental investigation of Existing Hollow-core Seating Connections pre and post Retrofit",* ME Thesis, Civil and natural Resource Engineering, University of Canterbury

8 Goto, Y., 1971, *"Cracks formed in concrete round deformed tension bars"*, ACI Journal, Vol. 68, No.4, 1971, 224-251

9 Matthews J, 2004. *Hollow-core Floor Slab Performance Following a Severe Earthquake*. PhD thesis, Civil Engineering, University of Canterbury

10 Bull D, Matthews J, 2003. *Proof of Concept Tests for Hollow-core Floor Unit Connections*. Commercial Report, C2003-1, Civil Engineering, University of Canterbury, New Zealand

11 Woods L, 2008. *Significance of Negative Bending Moments in the Seismic Performance of Hollow-core Flooring*. ME thesis, Civil and Natural Resources Engineering, University of Canterbury

12 Liew HY, 2004. *Performance of Hollow-core Floor Seating Details*. University of Canterbury, Department of Civil Engineering, ME thesis

13 SANZ 2006. *Concrete Structures Standard, NZS 3101-2006, including Amendments 1 and 2 (2008)*. Standards New Zealand

14 Broo H, Lundgren K, Engstöm B, 2005. *Shear and Torsion Interaction in Prestressed Hollow-core Units*. Magazine of Concrete Research 57(9): November, pp 521–533

15 Broo H, Lundgren K, Engstöm B, 2007. *Shear and Torsion in Hollow-core Units: Finite element analyses of full scale tests*. Structural Concrete 8(2): 87–100

16 Lindsay R, 2004. *Experiments on the Seismic Performance of Hollow-core Floor Systems in Precast Concrete Buildings*. ME thesis, Civil Engineering, University of Canterbury

17 MacPherson C, 2005. *Seismic Performance and Forensic Analysis of Precast Concrete Hollow-core Floor Super-assemblage*, ME thesis, Civil Engineering, University of Canterbury

Chapter 6

Limiting storey drifts for existing hollow-core floors

6.1 Introduction

Eight potential failure mechanisms for hollow-core floors in major earthquakes are identified in Chapter 5. These arise due to the interaction of the precast units with other structural elements. The potential failure mechanisms are;

1. Non-ductile failure of a structure associated with the increase in strength of beams due to interaction with floor slabs containing prestressed precast elements;
2. Loss of support to precast units;
3. Positive moment flexural failure of precast units near the supports;
4. Negative moment flexural failure of precast units near supports;
5. Shear failure near the supports;
6. Incompatible displacements between hollow-core units and other structural elements;
7. Torsion induced in hollow-core units;
8. Loss of shear transfer, or diaphragm action, in a floor.

For each of the failure modes listed above an equivalent ultimate limit-state condition is proposed. Methods of analysis are described to ascertain the displacement or magnitude of a structural action corresponding to each limit-state condition. The relevant value can be used to assess either the corresponding limit as a percentage of New Building Standards (%NBS) (current code requirement). Each potential failure mode will have its own percentage of New Building Standards. These values can be used to assess the need or otherwise to retrofit the structure to achieve an acceptable level of seismic performance.

The background to the different failure modes and proposed assessment criteria are given in Appendix A together with an outline of the relevant research used to develop the criteria. For additional information and appropriate references readers are referred to Appendix A.

6.2 Background

It is only in the last decade and a half that serious questions have been raised about the seismic performance of hollow-core floors. During this period there have been three sub-assembly tests to examine the performance of hollow-core floors in moment resisting frame structures and two tests to examine the interaction of hollow-core units and walls. In addition there have been a number of tests examining the performance of hollow-core units supported on rigid concrete blocks. Many of the earlier tests on hollow-core floors did not consider the implications of the simultaneous rotation of the precast units on its supports together with displacement associated with elongation. The amount of analytical and experimental work related to hollow-core floors is small compared with that carried out for other structural elements such as columns, beams and walls. While an attempt is made in this chapter to give realistic assessment limits for the different failure modes it must be noted that in many cases there is a lack of relevant experimental and analytical work and hence the criteria cannot be given with the same precision as that implied in current design standards. The number of tests that have been made is in all cases insufficient to enable the variation in strength to be realistically established. Hence it is not possible to accurately establish equivalent values to the lower characteristic strengths, on which structural design standards are based, and hence a certain amount of engineering judgement has been used in setting the proposed criteria. As further research is carried out it should be possible to improve on the limiting design and assessment criteria for hollow-core floors. In this context it should be

noted that concrete strength in hollow-core units is highly variable. Where test cores have been taken it has been found that concrete strengths have varied from 50 to 88MPa. Caution is required in interpreting results of structural tests on hollow-core units where only a few tests have been made and particularly where material strengths have not been recorded. In some situations the strength depends on the tensile strength of concrete. Even when the concrete compression strength has been measured the corresponding tensile strength cannot be reliably predicted, see Section 3.5. Consequently in these cases apparently similar test units can have widely differing ultimate strengths.

NZ Standards base design for the ultimate limit state on strengths calculated using lower characteristic material strengths multiplied by a strength reduction factor. A nominal strength is such that in general 19 out of 20 units will have strengths greater than the nominal value. The use of the strength reduction factor takes the theoretical failure rate (or safety index) to an acceptable value. With hollow-core floors there are insufficient test results to establish a corresponding lower characteristic strength and as noted above in developing design and assessment criteria some judgements have to be made. In evaluating of hollow-core floors for retrofit it is recommended that material strengths and strength reduction factors given in the appropriate materials standard be used where possible. Where displacements or deformations are critical in assessing a collapse mechanism a coefficient, which has a similar function to the strength reduction factor, is required. It is proposed that a deformation factor, ϕ_{df} , of 1.25 is used for this purpose. This factor allows for the inherent scatter in deformation predictions. It can be used either to increase the predicted deformation in an assessment or to reduce the maximum permitted design displacement.

6.3 Potential Non-ductile Failure of Building as a Whole

The first step in checking a building is to assess if its design strength, stiffness and the detailing that was used are sufficient to satisfy current NZ Standards. If the building fails to satisfy these it may be necessary to assess what level of earthquake actions the structure can safely sustain. One particular aspect that needs careful consideration is the over-strength of plastic hinges in reinforced concrete beams. Prior to the publication of NZS 3101; 2006 with Amendment 2 the design criteria in a number of situations led to under-estimates of flexural over-strengths of potential plastic regions. In the event of a major earthquake this may result in;

- Columns not being strong enough to ensure that a beam sway mode will develop in preference to a column sway mode;
- Shear reinforcement in the beams not being adequate;
- Plastic deformation of reinforcement or crushing of concrete being initiated outside planned potential plastic regions, where there is inadequate confinement reinforcement, which might result in a premature loss of strength.

In Structural Concrete Standards NZS 3101: 1982 and 1995 the contribution of floor slabs to the flexural strength of beams was under-estimated compared with the provisions in NZS 3101: 2006. To illustrate the changes, which have occurred in the Structural Concrete Standards since 1982, the effective widths of flanges that have been assumed to contribute to negative moment design strength and flexural over-strength strength of beams adjacent to internal columns are shown in Figure 6-1, and described below;

(a) With NZS 3101: 1982 the effective width of a flange on each side of a beam was taken as the distance of 2 times the thickness of the slab on each side of the web. Any reinforcement in this zone was used to calculate both the design strength and over-

strength (clause 6.5.3.2 (e))[1]. Any contribution of prestressed reinforcement in precast units to flexural strength of the beam was neglected.

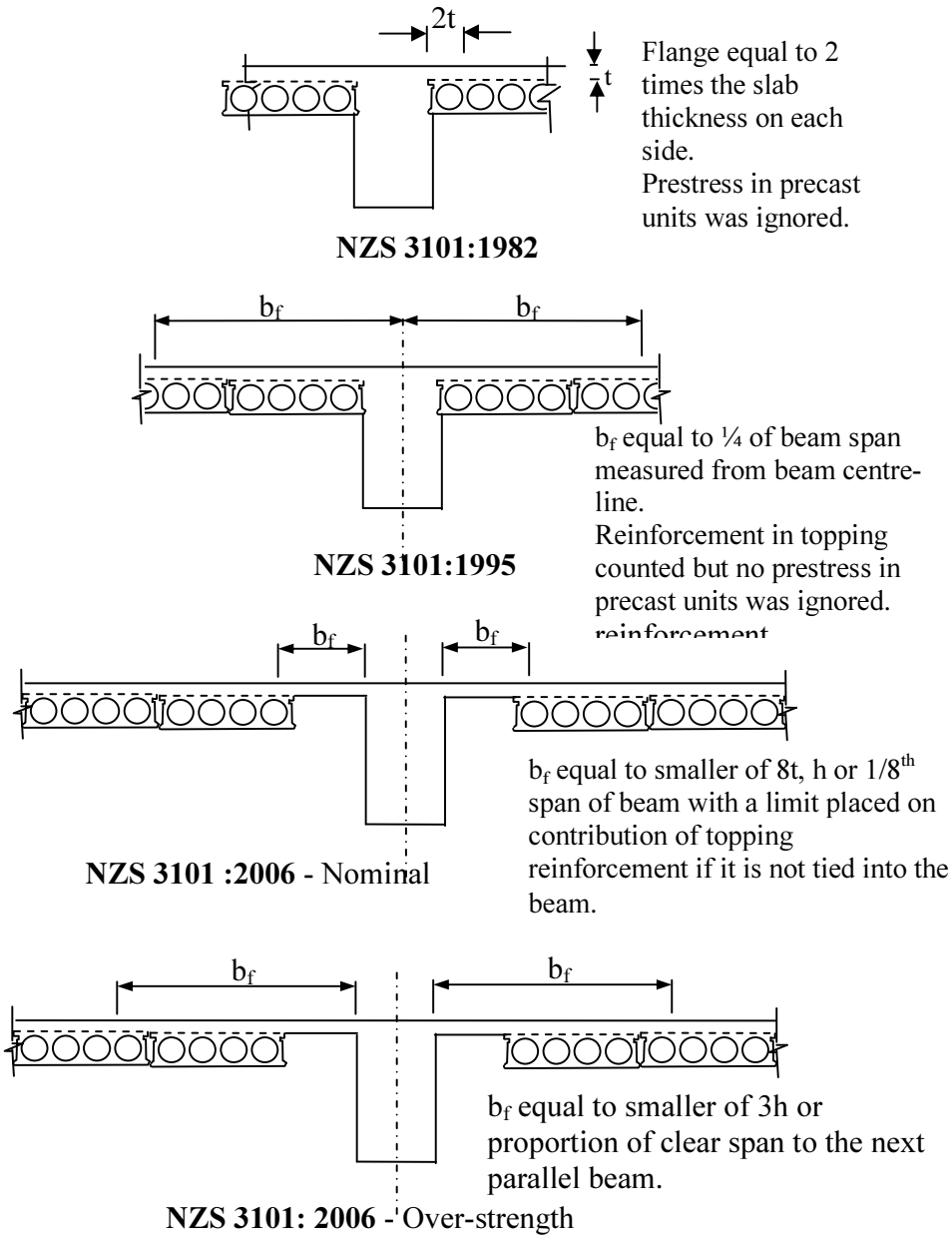

Figure 6-1: Effective flange width in different standards

(b) In NZS 3101: 1995 the effective flange width was taken as the smaller of the distance from the side of the web to a distance equal to 1/4 of the span of the beam, measured from the centreline of the section, or half the distance to the next beam (clause 8.5.3.3). As with the previous edition of this standard the effective width was used for both the design and over-strength calculations.

[1] Clause numbers refer to Standard being described

(c) In NZS3101: 2006 it was recognised that the effective flange width increased as the curvature in the plastic hinge increased. Consequently for the nominal strength, which should be reached close to the point where inelastic deformation is initiated, the width was limited (clause 9.4.1.6.1) to the smaller of;

- one beam depth,
- 8 times the thickness of the slab immediately adjacent to the beam,
- 1/8th of the span of the beam,
- a proportion of the distance to the next parallel beam, which depended on the relative beam depths.

In addition limits were placed on the contribution of flexural reinforcement in the slab to the nominal strength unless this reinforcement was tied into the web of the beam. In cases where the flange reinforcement is not tied into the web separation of the flange from the web may occur by a shear failure at the interface between the section containing the beam shear reinforcement and the slab reinforcement crossing the beam. To limit potential strength loss in the event of separation the contribution to nominal strength of a beam by reinforcement on one side of the web is limited to 10 percent of the total tensile strength. Where there is a flange on both sides the limit is 20 percent (10% on each side).

With over-strength conditions high curvatures are sustained in plastic hinges and consequently a greater width of slab contributes to the negative moment strength. This was recognised by increasing the effective flange width on each side of the web from one beam depth to 3 beam depths, deleting the 1/8 of the beam span limit and requiring the contribution of any prestressed reinforcement in the effective flange widths to be included in assessing over-strengths (clause 9.4.1.6.2). The limit on the contribution of flange reinforcement of 10% to the negative moment beam over-strength was not applied as a shear failure at the critical interface may or may not occur.

Where designs have been made on the basis of design rules in Standards prior to the 2006 edition the over-strength of the beams could well be under-estimated compared with values derived from NZS 3101: 2006 including Amendment 2. In these structures the possibility exists that in the event of a major earthquake the enhanced strength of the beams might lead to a non-ductile failure. For example shear or anchorage failures of reinforcement might occur in the beam, or a column sway mechanism might develop instead of the intended ductile beam sway mechanism.

Figure 6-2 shows part of a storey shear versus storey drift for a building subjected to inelastic cyclic loading. The figure illustrates how an assessment may be made for the possible development of a column sway mechanism in the storey. To make this assessment the lateral storey shear strengths corresponding to beam and column sway mode mechanisms in the storey can be assessed following the Method B given in NZS 3101: 2006, Appendix D. If the strength of the column sway mode exceeds that of the beam sway mode by a sufficient margin the potential formation of the column sway mode is prevented. In assessing the values of beam and column storey sway shear strengths allowance should be made for redistribution of actions both within a frame and between frames. However, care is required to ensure equilibrium is maintained in this process. The following steps may be followed.

(a) The beam sway storey shear strength corresponding to average material strengths is calculated. This may be based on flexural strengths at the critical sections of the primary plastic hinges being taken as 1.1 times the nominal flexural strength for reinforced concrete sections. The corresponding beam sway storey shear strength is then calculated using these flexural strengths following Method B given in NZS 3101: 2006 (Appendix D, clause D3). This storey shear strength may be assumed to be sustained at a displacement corresponding

to the average elastic limit material strains (curvature) being sustained in the critical sections of the potential plastic regions.

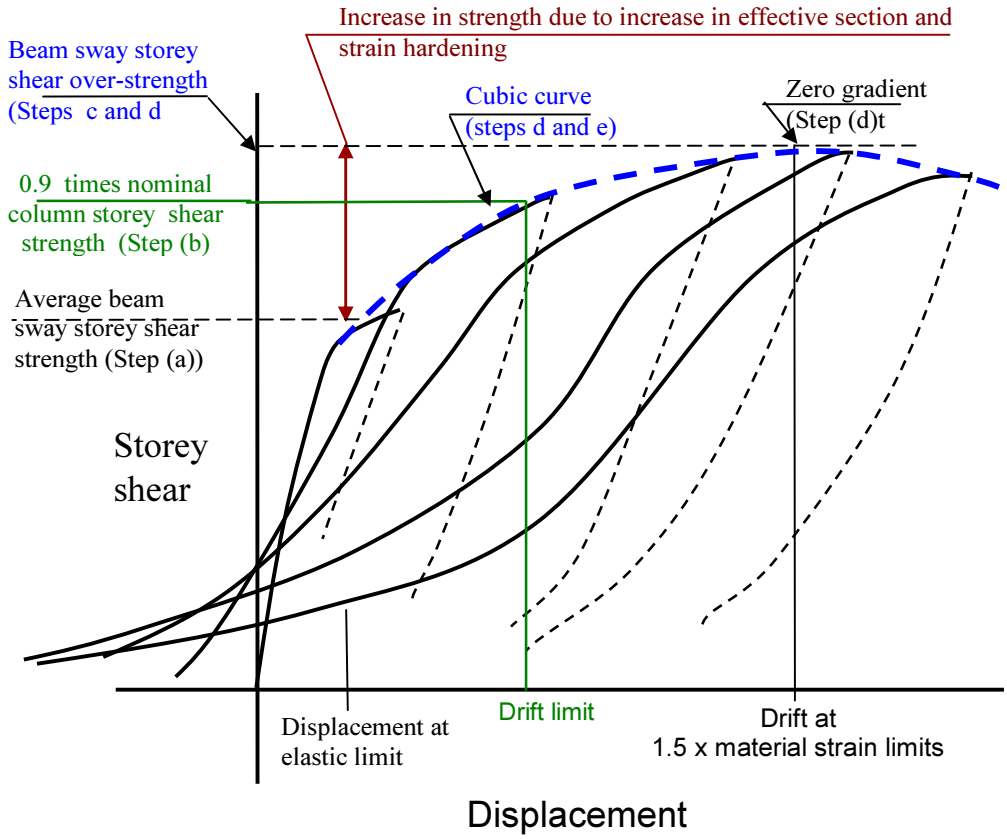

Figure 6-2: Relationship between beam and column storey sway shear strengths

(b) The column storey sway shear strength is calculated on the basis that the nominal flexural strengths are sustained in the critical sections at the top and bottom of the columns in the storey. The column sway storey shear strength is taken as the sum of the shears in the columns multiplied by 0.9. Any change in axial load due to seismic induced actions may be neglected on the basis that a reduction in flexural strength in one column due to reduction in axial load is compensated by an increase the flexural strength associated with an increase in axial load in other columns. Where columns are not confined to meet the minimum requirements for limited ductility further study is required to ensure the necessary curvature can be sustained to develop the nominal flexural strength of all the critical sections. The 0.9 factor is applied to the storey shear sway strength to maintain an adequate margin between the beam sway and column sway shear strengths.

(c) The flexural over-strengths of the primary plastic hinges are calculated assuming the reinforcement has over-strength values of 1.20 and 1.30 times the design yield strength for Grade 300 and Grade 500 reinforcement respectively. These values replace 1.25 and 1.35 in NZS3101:2006 as the strength relates to average reinforcement properties rather than upper characteristic values.

(d) The beam sway storey strength is calculated from the flexural over-strengths of the primary plastic regions determined in step (c) and by following the approach detailed in Method B in

Appendix D of NZS 3101; 2006 with Amendment 2. The displacement corresponding to this beam sway strength may be taken as the value which corresponds to an average material strain level in the potential plastic regions of 1.5 times the limiting ultimate strength values given in NZS3101: 2006 with Amendment 2 (clause 2.6.1.3).

(e) The variation in beam sway storey shear strength between the shear force and displacement values found in (a) and (d) may be assumed to follow the cubic curve shown in Figure 6-2. The gradient of the tangent to the storey shear strength versus displacement curve is zero at the displacement given in (d).

(f) The limiting safe drift is taken as the value corresponding to the intersection of the strength found in (b) with the beam sway storey shear strength, found in steps (a) and (e), as illustrated in Figure 6-2.

6.4 Loss of support

Loss of support does not need to be considered where either;

- Two cells at the end of the hollow-core unit being considered have been broken out and filled with reinforced concrete such that the area of reinforcement in the broken out cells times its design yield stress exceeds twice the maximum shear force sustained by the hollow-core unit. In addition this reinforcement must be adequately anchored to sustain the yield force both in the hollow-core cells and in the beam; or
- The seating requirements of NZS 3101: 2006 clause 18.7.4 with Amendment 2 are satisfied.

6.4.1 Requirements in Standards

Prior to the publication of NZS3101: 1995 there were no code provisions for the minimum required length of support ledges for precast floor units. Practice ranged from the use of wide support ledges to support being provided by cover concrete. In some cases in the field precast units were found to be too short to span between support ledges. In such cases temporary supports were provided and the cells near one end of the hollow-core unit were broken out, reinforced with bars in the shape of a paper clip or hairpin and filled with concrete. This provided an extension to the precast unit and tied it into the supporting beam or wall (see Figure 2.1)

In NZS 3101: 1995 supporting ledges were required to provide a minimum contact length between precast unit and supporting structure of the greater of either 50mm or the span divided by 180 plus as additional distance to allow for construction tolerances.

In the 2006 edition of NZS 3101 the minimum distance of 50mm was increased to 75mm and the span divided by 180 limit was retained together with the allowance for construction tolerances. The increase in length of support ledge was made as tests had indicated that considerable spalling can occur from both the front face of the support ledge and the back face of the hollow-core unit. In addition it was required that low friction bearing strips be used with the hollow-core units. Other provisions remained the same as in the 1995 edition of the standard.

6.4.2 Actions that need to be considered in assessing loss of support

Loss of support may occur due to;

(i) Inadequate allowance for construction tolerance;

(ii) Movement of hollow-core units relative to the ledge providing support due to elongation and rotation of support beams;

(iii) Spalling of concrete from front face of support ledge and back face of the hollow-core unit;

(iv) Creep, shrinkage and thermal movement of the floor;

(v) Crushing of concrete resisting the support reaction;

(vi) Failure of support ledge due to actions in supporting beam or other structural element.

Allowances for each of the actions described above are given below.

(i) Generally precast units have been constructed on the short side to reduce problems in placing the units on supporting beams. In an assessment ideally the construction tolerance should be measured. Where these measurements are not available it is recommended that a construction tolerance of 20mm is assumed. This gives an initial contact length between the hollow-core unit and support ledge of the dimensioned length of the support ledge minus 20mm.

(ii) Elongation of plastic hinges can push beams supporting hollow-core units apart and reduce the contact length between the precast units and support ledge. Experimental measurements of beam elongation have been related to material strain levels in plastic hinges (see Chapter 3). However, as elongation is related to the mid-depth of the beam containing the plastic hinge it is also necessary to allow for further movement between precast units and support ledge due to rotation of the supporting beam, as illustrated in Figure 6-3.

The magnitude of elongation in a plastic hinge depends on the degree of restraint provided by prestress in precast units, which span past a plastic hinge, see Section 3.4.3. Where there is little restraint the elongation, δ_e, is given by;

$$\delta_e = 0.0014 h_b \, M_{sr} \leq 0.037 h_b \qquad \text{(Eqn. 6-1)}$$

Where h_b is the overall depth of the beam containing the plastic hinge and M_{sr} is the ratio of the material strain (curvature) in the plastic hinge to the limiting elastic curvature, which is given by $2\varepsilon_y / h_b$, where ε_y is equal to $f_y / 200{,}000$ and the yield strength, f_y, is not taken greater than 415MPa.

Calculations for material strain ratios follow the method set out in NZS 3101:2006 (with Amendment 2, clause 2.6.1.3). For cases where the prestressed units can provide significant restraint to plastic hinge zones the magnitude of elongation used for assessment can be reduced, see Chapter 3, Section 3.4. The additional displacement due to rotation of the supporting beam is equal to the rotation times the height difference between the centre-line of the beam containing the plastic region and the support level of the precast unit, as illustrated in Figure 6-3.

(iii) Spalling of concrete occurs from the front of the support ledge and the back face of the hollow-core units, reducing the contact length available to support the precast units. Tests have indicated that the loss in seating length due to spalling and prying action of the precast unit increases with the contact length between the unit and support ledge. Assessed loss due to spalling, L_{loss}, is given by-

$$L_{loss} = 0.5\, s_l \leq 35\, mm \qquad \text{(Eqn. 6-2)}$$

Where s_l is the initial contact length between hollow-core units and support ledge. Where a low friction bearing strip has been used the value given by Equation 6-2 may be reduced by multiplying it by 0.75.

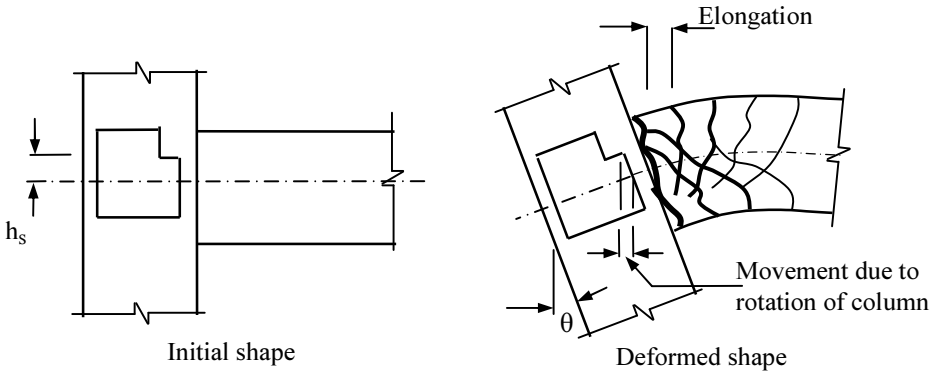

Movement of support relative to precast unit equals elongation of beam plus column rotation, θ, times height between beam centre-line and support seat, h_s

Figure 6-3: Displacement at support of precast unit due to elongation and rotation of support beam

(iv) Shortening of a precast floor due to creep, shrinkage and or thermal strains my occur at either one of the supports or both of the supports. Once a crack has been initiated at one end it is possible that all the movement in the span will occur at that end. Hence two limiting cases should be considered. Namely all the movement occurs at the end or no movement occurs at the end. Opening up a crack due to creep and shrinkage movement reduces the shear transfer that can develop across the crack and consequently this reduces the potential prying action of the hollow-core unit on the beam. In this situation the reduction in prying action can either reduce or eliminate the spalling that occurs from the back face of the hollow-core unit. In recognition of this action the calculated movement due to creep, shrinkage and thermal strain is not added to the loss of length due to spalling, but the greater loss in contact length due to spalling, or due to creep, shrinkage and thermal strain is assumed to apply.

For practical purposes the loss in support length due to creep, shrinkage and thermal strains may be taken as 0.6mm per metre of length of the precast unit.

(v) Sufficient contact length should remain between each hollow-core unit and the supporting ledge, after allowance has been made for the loss of supporting length identified above, to prevent crushing of concrete due to the reaction. The critical reaction is likely to arise due to gravity loading plus the additional reaction induced by vertical seismic movement of the ground. The required bearing area can be calculated from the allowable bearing stress in NZS 3101: 2006, clause 16.3.

(vi) Failure of a support ledge in a beam supporting precast units may occur due to structural actions resisted by the beam. As indicated in Section 5.4.1 if the supporting ledge is in cover concrete that is not tied into the beam, see Figure 6-4, the support ledge may fail due to bond cracks and prying action of precast units, or due to spalling associated with the formation of a plastic hinge.

Where a support ledge is constructed on cover concrete and it is located either alongside the ductile detailing length of a potential plastic region, or it is within a vertical distance of 6 times the diameter of longitudinal flexural reinforcement that is stressed to a level of 250MPa or more, the support ledge is in danger of premature failure due to spalling of cover concrete associated

with the development of bond cracks (see 5.4.1 and Figure 5-7). In this situation it is recommended that the support ledge is retrofitted over the critical length.

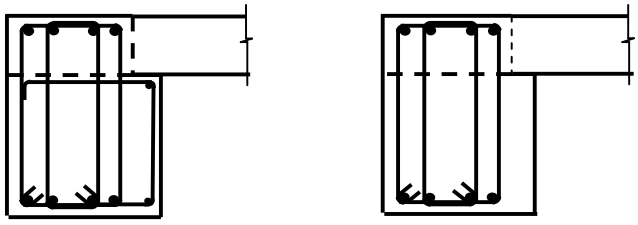

(a) Support ledge tied into beam

(b) Hollow-core supported on cover concrete

Figure 6-4: Precast units supported on cover concrete or on a ledge tied into a beam

To obtain the level of reliability (safety index) in design New Zealand practice uses strength reduction factors for the ultimate limit state. To be consistent with this approach it is recommended that strength reduction factors should be used in assessing existing structures. For bearing stress calculations a strength reduction factor of 0.65, as given in the NZS 3101 (clause 2.3.2.2), is recommended. To be consistent with this approach the calculated loss in contact length between the precast unit due to spalling and rotation of the support beam etc, should be increased by a displacement factor, ϕ_{df} , which is taken as 1.25.

6.4.3 Example of calculation for loss of support

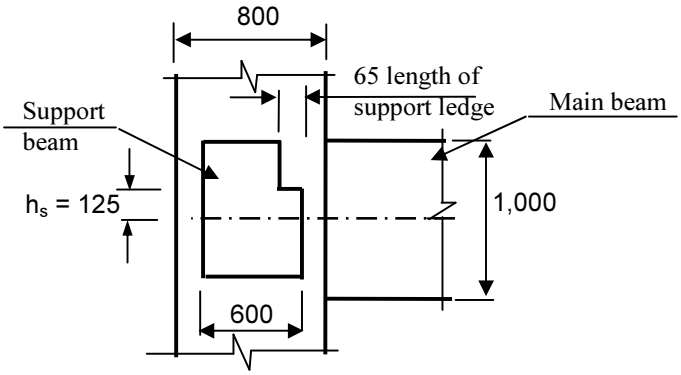

Figure 6-5: Example for calculation of loss of support

The support ledge for a 300mm hollow-core floor with 75mm of insitu concrete topping is shown in Figure 6-5. The supporting beam frames into a column. The main beam, which also frames into the column, is parallel to the hollow-core units, and has an overall depth of 1,000mm and it is reinforced with Grade 300 reinforcement. The design concrete strength in the support beam is 25MPa. The support ledge is located at a height of 125mm above the mid depth of the main beam. The span of the hollow-core units is 12m and the dead load and seismic live load is 8kN/m. It is assumed the building is in Christchurch and it is located on a soft soil site. The precast units are mounted directly on the support ledge without a low friction bearing strip.

The detailed length of the support ledge is 65mm. Allowing for construction tolerance this leaves an initial contact length, s_l, of 45mm.

The potential movement due to creep, shrinkage and temperature change is 12 *x* 0.6, equal to 7.2mm.

Loss due to spalling from back face is given by Equation 6-2 and is equal to 22.5mm, which is further increased by the deformation factor, ϕ_{df} , to 1.25 x 22.5 = 28.1mm.

The maximum reaction is built up from the gravity load plus the additional vertical reaction from seismic actions. The gravity reaction is 8 x 6 = 48kN.

The seismic coefficient for vertical seismic actions given in NZS 1170.5 is 0.7 times the corresponding horizontal coefficient. The natural period of the floor is less than 0.3s and hence the maximum vertical seismic reaction is given by;

$$V_{vertical\ seismic} = 48 \times (0.7 \times 0.22 \times 3.0)/1.25$$

Where following the Earthquake Actions Standard [NZS1170.5: 2004]. 0.22 is hazard factor, 3.0 is the spectral shape factor and the 1.25 is the minimum structural performance factor for a nominally ductile element in the structural concrete. This expression gives a peak reaction of 66kN.

From clause 16.3 in NZS 3101: 2006 the length required for bearing is equal to the maximum reaction divided by the width of the hollow-core unit (1,200mm) and the allowable bearing stress, which is $\phi f_c'$ giving a stress of 0.65 x 25MPa. This gives a required bearing length of 3.4mm.

The length available to resist movement of the hollow-core unit over the supporting ledge due to elongation and rotation of the supporting beam is equal to;

45 –28.1 – 3.4 = 13.5mm.

To calculate the movement due to elongation and rotation of the supporting ledge it is necessary to determine the plastic hinge rotation and the rotation of the supporting beam. A trial and error approach may be used,

Assume the maximum inter-storey drift ratio is **1.55%.** The results of elastic deformation together with the plastic deformation shape are shown in Figure 6-6.

The plastic storey drift ratio is 0.0155 – 0.006 = 0.00955.

From the elastic deflected shape it can be seen that 80% of the drift comes from curvature of the beam. Hence the rotation of the support beam is equal to (0.8 x 0.006 + 0.00955), which is 0.01435 radians. This gives a displacement of the ledge relative to the hollow-core unit of 0.01435 x 125 = 1.79mm. With the deformation factor, ϕ_{df} , (1.25) the design displacement becomes 1.25 x 1.79 = 2.24mm, which leaves **11.26mm** to accommodate elongation of the main beam.

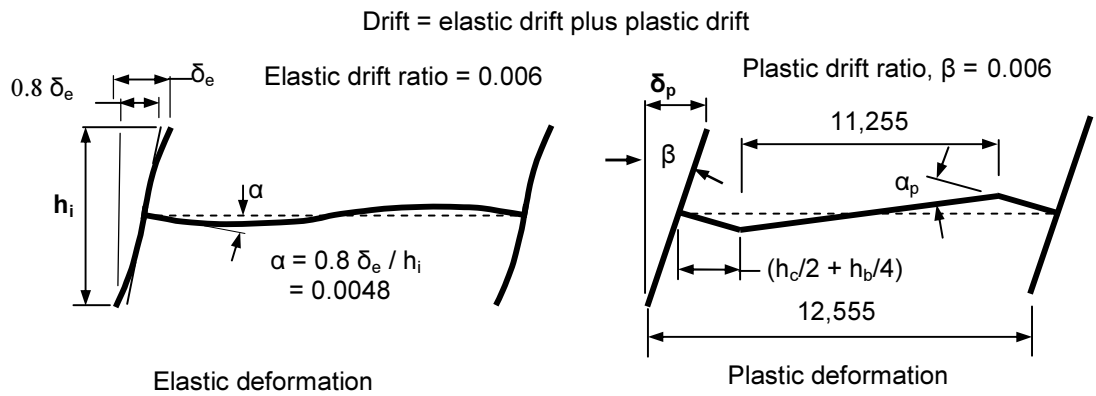

Figure 6- 6: Elastic and plastic deformation of level

The plastic hinge curvature can be calculated from the right hand side of Figure 6-6. The plastic hinge rotation is $0.00955\,(12{,}555/11{,}255) = 0.01065$ radians. To this is added the rotation due to elastic curvature (as defined in NZS 3101:2006), which is taken as $2\varepsilon_y/h$, (3 E^{-6}), where ε_y is the yield strain of the longitudinal reinforcement (in calculating the yield strain the yield stress is not to be taken greater than 415MPa) and h is the beam depth. The elastic curvature for the beam is equal to 3.0×10^{-6}. Hence the total plastic hinge rotation is equal to the elastic curvature times the effective plastic hinge length plus the plastic hinge rotation, which is equal to;

$$(0.01065 + (3.0 \times 10^{-3}) \times 500 = 0.01215 \text{ radians.}$$

The resultant curvature in the plastic hinge is equal to the rotation divided by the effective plastic hinge length (h/2), and it is equal to 2.43 E-5. Hence the material strain ratio, M_{sr}, (ratio of curvature in the effective plastic binge length divided by the elastic curvature is given by;

$$M_{sr} = 0.0000243/0.000003 = 8.1.$$

The elongation corresponding to this curvature is given by Equation 6.1, with a resultant value of 0.0014 x 8.1 x 1000 = 11.3mm, which is sufficiently close to the value of 11.26mm available for elongation.

Hence the limiting inter-storey drift is 1.55% and from this either the proportion of New Building Standards (%NBS) can be determined following the steps given in Chapter 4.

If the support ledge is not tied into the supporting beam and either,

- it is within the ductile detailing length of a plastic hinge, or
- the vertical distance between the ledge and the closest flexural reinforcement stressed to 250MPa or more in tension in a seismic load case and the distance between the longitudinal flexural reinforcement and support seat is less than 6 times the diameter of the flexural reinforcement,

the ledge should be retrofitted to prevent spalling from the front face of the support ledge.

6.5 Positive moment failure near a support

6.5.1 Background

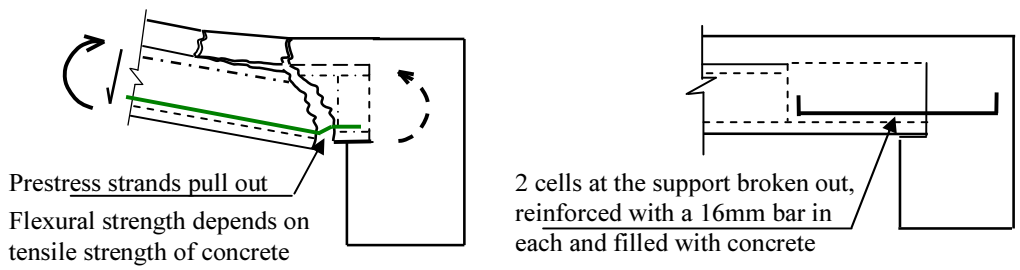

(a) Positive moment failure **(b) Reinforced against positive moment failure**

Figure 6-7: Positive moment failure near a support

A positive moment failure **does not** occur where two or more cells at the end being considered have been broken out, adequately reinforced and filled with concrete. For the reinforcement to be considered adequate the area of the reinforcement at the end being considered times its yield stress should be equal to or greater than twice the maximum reaction associated with seismic load cases acting on the hollow-core unit. This reinforcement, see Figure 6-7 (b), should be fully developed in both the supporting beam or element and the filled cells of the hollow-core unit.

Where cells have not been broken out and reinforced a flexural crack must develop to allow relative rotation to take place between the hollow-core unit and supporting beam. As the hollow-core units are relatively stiff and brittle this rotation occurs when a building sways significantly due to wind or earthquake actions. The crack may be located at either end of the hollow-core units, section B-B in Figure 6-8, or near the face of the internal dam that prevents concrete flowing into the cell, which is at section A-A in Figure 6-8. Where cells have been broken out and reinforced, as illustrated in Figure 6-7 (b), the flexural crack may be assumed to form at the back face of the hollow-core units, which is section B-B in Figure 6-8.

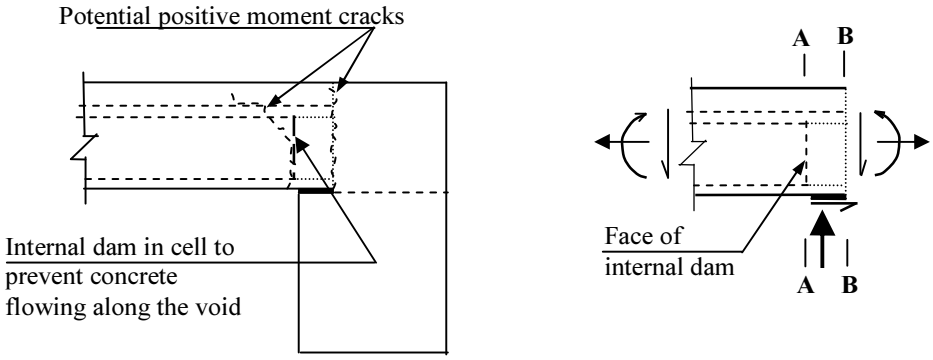

(a) Location of potential positive moment flexural cracks

(b) Forces acting on critical sections

Figure 6-8: Critical sections for positive moment cracks near support

The positive moment flexural strength of both potential critical sections, A-A and B-B in Figure 6-8, depends on the tensile strength of concrete, as the pretension strands at section A-A are too close to the end of the unit and too widely spaced to make a significant contribution to the strength.

The problem with positive moment flexural cracks occurs when the crack is located close to the face of the support, which is at section A-A in Figure 6-8. This situation is likely to occur where;

- The unit is mounted on mortar, as this increases the horizontal shear force that can be transmitted at the support;
- The vertical reaction is high, as this increases the friction force at the support location;
- The strength of the insitu concrete behind the hollow-core unit is relatively high.

Once a crack forms at section A-A or B-B a weak section is created and any subsequent movement of the hollow-core unit relative to the support beam, due to elongation or shrinkage accumulates at this location. The difficulty is where the critical crack forms at section A-A. As this crack widens shear transfer by aggregate interlock action is lost (at a crack width of the order of 1mm) leaving the shear force to be resisted by dowel action of the strands. Once the crack gets to a width close to the strand diameter the strand will bend and pull out of the crack, which transfers the total shear force to the insitu concrete above the hollow-core unit. In tests this has led to the top slab separating from the hollow-core unit, resulting in collapse, see Figure 5-9.

The critical limit state for assessment of a positive moment flexural crack in the hollow-core unit close to the support point is taken as the state which causes the movement of a hollow-core unit relative to a support point to be equal to the strand diameter divided by the displacement factor, ϕ_{df} , (1.25).

Positive moment cracks have been observed in two series of tests. In the two cases the cracks were first observed at drift ratios of 0.25% and 0.5%, which is well within the elastic response range of frame buildings. These cracks will not develop where either;

- the cells have been broken out and adequately reinforced, as noted at the start of this section, or
- a crack of sufficient width, which may be taken as 0.5mm or greater, has formed behind the hollow-core unit indicating that the unit has moved over the support.

6.5.2 Example of positive moment failure

A hollow-core unit, which is in danger of developing a positive moment crack near the support, is shown in Figure 6-9. The hollow-core unit has a depth of 300mm with an additional concrete topping of 75mm. The strands in the hollow-core unit have a diameter of 12.9mm. The elastic and plastic deformation of the beams and columns at the level being considered are shown in Figure 6-6.

The ultimate limit state for positive moment failure is reached when the crack width reaches a width of 12.9mm divided by the deformation factor, ϕ_{df}, (1.25). This crack opens due to the relative rotation of the hollow-core unit and the support and elongation of the main beam.

A trial and error method may be used. The calculations follow the approach used in the loss of support example (6.4.3).

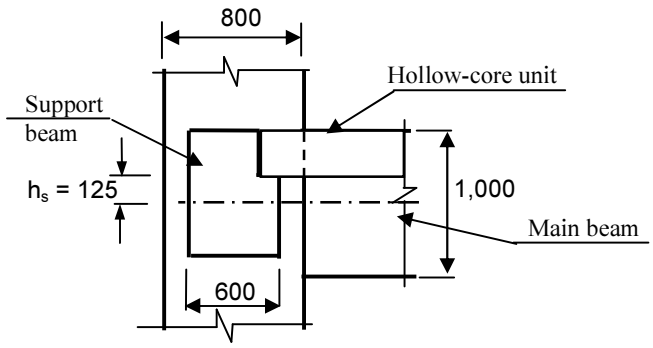

Figure 6-9: Example positive moment failure

Assume limiting drift is 1.34%. The elastic and plastic deformation patterns are given in Figure 6-6.

The elastic drift ratio is 0.6% and hence plastic deformation drift ratio is (1.34-0.6)%, which gives a value of 0.74%.

The rotation of the column and the supporting beam due to the elastic and plastic components is (0.8 x 0.6 + 0.74) %, = 1.22%

Hence movement due to rotation of support = 0.0122 x 125 = 1.525mm

The plastic hinge rotation in the beam is equal to plastic rotation plus elastic limit rotation. The plastic hinge rotation may be calculated from the geometry shown in Figure 6-6 and the corresponding elastic rotation in the plastic hinge is taken as $(2\varepsilon_y/h)\times(h/2)$, which gives a total plastic hinge rotation of ;

$$\frac{0.0074\times 12{,}555}{11{,}255}+\frac{2\times 300\times 500}{200{,}000\times 1000}=9.755\times 10^{-3}$$

The limiting curvature is equal to rotation divided by effective plastic hinge length, which gives a value of 1.95 x 10^{-5}. The corresponding material strain ratio is found by dividing this curvature by the elastic limiting curvature, ($2\varepsilon_y / h_b = 3.0 x 10^{-6}$), which gives a value of ;

$(1.95 \times 10^{-5})/(3 \times 10^{-6}) = 6.50$.

From Equation 6.1 (same as Equation 3.3) the elongation is 0.0014 x 6.503 x 1000 = 9.10mm.

Hence the total movement = 9.10 + 1.525= 10.6

Allowing for deformation factor, ϕ_{df} , the limiting design movement is 12.9/1.25 which equals 10.3mm, which is sufficiently close to the calculated value of 10.6 based on a drift ratio of 1.34%.

Hence the limiting drift ratio for the storey is 1.34%. The percentage of New Building Standards (%NBS) can now be calculated from this drift ratio (see Chapter 4).

6.6 Negative moment failure near support

6.6.1 Introduction

Reinforcement connecting the hollow-core unit to a supporting element may be stressed due to a crack at the back face of a hollow-core unit. The crack may be induced by creep and shrinkage of concrete, elongation of beams parallel to the precast units, relative rotation of hollow-core unit and supporting beam or the application of gravity loads. Under any combination of these conditions the tension force resisted by this reinforcement applies a combination of negative moment and axial tension force to the hollow-core unit. In major earthquakes wide cracks may be induced at the supports. In such situations continuity reinforcement connecting the hollow-core units to their supporting structure may be stressed to close to its ultimate strength. Where the starter reinforcement has been terminated close to the support a critical section for negative flexure may occur at the cut off point. This situation is particularly critical where the starter bars have been lapped to non-ductile mesh.

In checking the negative moment capacity at cut off positions the following aspects need to be considered.

1. The critical negative moment and axial tension force that may be induced can be calculated from the continuity reinforcement. Two cases need to be considered, namely;
   (a) Maximum moment with no axial tension. This occurs when the soffit of the hollow-core unit remains in contact with the back face of the ledge so that a flexural compression force equal to the tension force can be sustained;
   (b) The width of the crack is such that no compression force can be sustained at the back face of the hollow-core unit. In this case an axial tension force and a bending moment due to eccentricity of the continuity reinforcement forces to the neutral axis of the hollow-core unit are induced.

   Calculations carried out for a 300mm deep hollow-core unit indicate that the first condition (a) is critical. However, this may not hold for hollow-core units with other depths.

2 The critical bending moment transmitted to the end of the hollow-core unit is calculated assuming the yield stress of the reinforcement corresponds to the upper characteristic value, $1.15f_y$. To allow for strain hardening of the reinforcement the following approximation of stress versus strain is proposed.
   - The stress increases linearly with strain up to the yield strain;

- The stress is uniform at $1.15f_y$ between a yield strain and 8 times the yield strain, where strain hardening is assumed to start;
- The stress increases linearly from $1.15f_y$ at 8 times the yield strain to $1.38f_y$ at a strain of 0.05;
- The stress of $1.38f_y$ is constant for strains greater that 0.05 to a limit of 0.10, when failure is assumed to occur.

To assess the stress levels in the reinforcement it is necessary to relate the strain level to the crack width at the back of the hollow-core unit, which in turn can be related to drift. For this purpose the following approximations have been made;

- A development length for the continuity reinforcement is calculated. This is based on 2/3rds of the development length given in NZS 3101: 2006, Equation 8-2, with f_y replacing the assumed upper characteristic yield strength. The 2/3 factor is used as the code equation is a design value which is on the conservative side for development length calculations. Without the 2/3 factor the stress levels and crack widths would be un-conservative for the purposes of assessing actions imposed on hollow-core floors;
- It is assumed that the strain distribution in the development length is linear over the development length, regardless of whether the strains are in the elastic or plastic ranges. Fortunately the stress strain gradients in the plastic range are small and hence stress levels are not very sensitive to accurate strain profiles.

3 For the case given in 1 (a), where no axial tension is induced, the distribution of bending moment induced by continuity reinforcement at the supports (as found in step 2 above) may conservatively be assumed to vary linearly from the value found in 2 to zero at the far end. For the case 1 (b) the continuity moment and axial tension may conservatively be assumed to be uniform over the span. A more detailed analysis, which would be specific to each floor and unit within the floor a less conservative assumptions may be developed by allowing for the restraint provided by adjacent hollow-core units.

4 The numerical values of bending moment close to the supports can be found by adding the appropriate gravity load moments to the bending moments induced by the continuity reinforcement, as calculated in step 3. The gravity load and seismic moments are calculated assuming the hollow-core units are simply supported. Seismic moments due to vertical ground motion should be calculated with a structural ductility factor of 1.25 where mesh has been used and 2 where ductile reinforcing bars have been used. See Section 3.5 for further details of bending moments associated with vertical ground motion.

5 Standard flexural theory (plane sections remain plane) may be used to assess the ultimate flexural strength of hollow-core floors in zones that are not reinforced with mesh. Where mesh is used flexural theory may also be used but allowance should be made for the concentration of strain in reinforcement due to the stiffening effect of concrete in tension (see Appendix A5.2). This strain concentration arises as the reinforcement proportion is low and the tension force transmitted across a crack by the reinforcement is insufficient to generate other cracks in the immediate locality of the first crack. Consequently yielding of the mesh is confined to a short length and the average tensile strain is much lower than the peak tensile strain in the reinforcement at the crack. To allow for this effect the average strain in tension reinforcement, found from standard flexural theory, should be multiplied by a strain concentration factor to calculate the critical strain and stress in the reinforcement. Limited testing has indicated that a strain concentration factor of 4 is appropriate. Generally it is found that the strain in mesh is critical in determining the

flexural strength and that for practical purposes the stresses in the concrete can be assumed to be within their linear range.

6 The ultimate strength design check consists of checking if the ultimate strength design action moments induced in the negative moment region of the floor can be safely sustained. The induced negative moments arise from;

- Axial forces and negative moments transferred to hollow-core units and concrete topping by continuity reinforcement connecting the floor to the supporting structure;
- Structural actions associated with gravity loads and vertical seismic actions.

7 To provide the appropriate level of safety for the ultimate limit state the design negative moment flexural strength of the hollow-core floor should be taken as the nominal negative moment flexural strength times the appropriate strength reduction factor. To achieve this objective the design negative moment flexural strength of the floor due to the prestress and mesh and/or other reinforcement located in the critical section at the cut off position of the starter bars should be taken as 0.85 times the nominal flexural strength. However, the flexural strength associated with the starter bars should not be reduced by the strength reduction factor as it is assumed that these bars have a yield stress of $1.15f_{y,}$ (corresponding to an upper characteristic value) and it is the action of this reinforcement that induces the critical negative bending moments.

8 The crack at the end of a hollow-core unit opens up due to the slip of the continuity reinforcement from the concrete on both sides of the crack. At this section plane sections do not remain plane. Hence some assumption has to be made regarding the depth of the compression stresses near the base of the hollow-core unit. It is suggested this depth be taken as 1/10 of the depth of the hollow-core unit and the centre of the compression force 1/30 of the depth above the soffit.

6.6.2 Example of negative moment check

Figure 6-10 shows a 300 hollow-core floor with a 75mm topping concrete, which has with a strength of 25MPa. The insitu topping is reinforced with 665 mesh (non-ductile). At each support two cells have been broken out and reinforced with paper clip shaped 12mm Grade 300 bars (hairpin shaped bars act in a similar manner), which extend 400mm into the hollow-core unit. Grade 300 starter bars, with a diameter of 12mm and a spacing of 300mm extend to a distance of 900mm into the span from the end of the hollow-core units. The location of the reinforcement is shown in Figure 6-10. The hollow-core units have a span of 12m. The mesh has a design ultimate stress of 485MPa. Each hollow-core unit is assumed to contain seven 12.9mm strands (each with an area of 100mm^2) stressed to about 1,000MPa after losses. The self weight of the hollow-core plus topping concrete is taken as 6kN/m run (width 1.2m). The building containing the floor is assumed to be in Christchurch on a soft soil site.

To initiate the analysis some assumption has to be made regarding either the drift or crack width at the back face of the hollow-core unit. This enables the continuity moments to be assessed and the corresponding critical moments near the support to be determined. These values are found by adding the gravity load moments and the bending moments associated with vertical ground motion to the continuity moments.

Assume the starter bars in the insitu concrete above the back face of the hollow-core unit are stressed by a crack width of 7.75mm. Based on the assumptions listed in Section 6.6.1 the stress levels in the continuity bars from top to bottom are 378MPa, 361MPa and 345MPa respectively. The end bending moment is 79.1kNm of which 28 percent arises from the use of the paper clip shaped bars in the broken out cells. This illustrates why this form of continuity reinforcement

should not be used to reinforce broken out cells. If the 16mm bars recommended in NZS 3101: 2006 had been used the additional moment would have been reduced by 16.3kNm, which would have made the negative moment capacity of the floor at the critical section much less critical, see Figure 6-11.

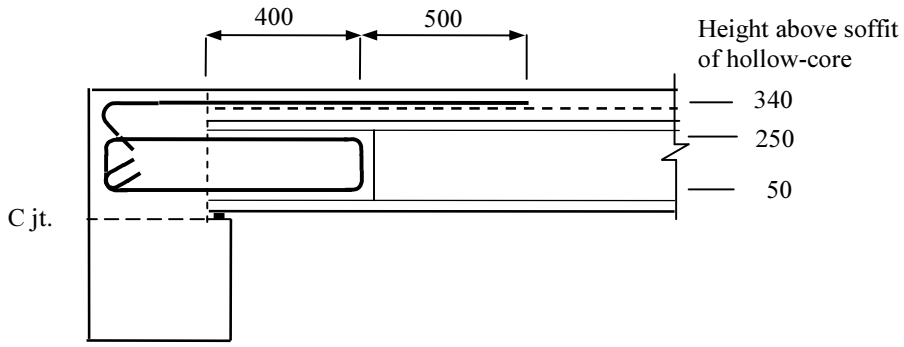

Figure 6-10: Details near support of hollow-core unit in a floor

The resultant demand moments near the hollow-core support are listed in Table 6-1 and shown in more detail in Figure 6-11.

Table 6-1: Bending moments (kNm) near support assuming crack width of 7.75mm with gravity load moments and different levels of vertical seismic forces

Distance[1] (m)	Self weight Moments	Vertical Seismic[2]	From end moment	Moment[3] Coverage	Resultant moments (kNm) 500 yr.	100 yr.	0 yr.
0	0	0	-79.1	-79.1	-79.1	-79.1	-79.1
0.5	17	-7	-75.8	-89	-69.1	-65.6	-62.1
1.0	33	-15	-72.5	-37	-61.1	-53.6	-46.1
1.5	47	-22	-69.2	-37	-54.1	-43.1	-32.1
2	60	-29	-65.9	-37	-48.1	-33.6	-19.1

[1] Distance from back face of hollow-core
[2] values assume simple supports for 500 year return period
[3] Moment coverage provided by reinforcement and prestress

An analysis from first principles of the hollow-core section with 665 mesh in the topping concrete gives a nominal negative moment flexural strength of 43kNm. This is found by limiting the peak strain in the mesh to 0.02, which corresponds to an average limiting strain in the mesh of 0.005 (due to strain concentration factor of 4). The corresponding stresses in the concrete for practical purposes can be found assuming linear elastic behaviour. To make this analysis the section should be modelled to allow for voids in the concrete. The design strength of the hollow-core unit with 75mm topping concrete reinforced with 665 mesh becomes 0.85 x 43 = 37kNm, which is shown on Figure 6-11.

Of the nominal flexural strength of 43kNm 60% was due to the mesh and the remaining 40% was associated with the moment resisted by the level-arm between the centre of compression and the prestress force in the strands. These values were calculated assuming the pretension strands were located 37mm above the soffit (a value which was measured on 300 hollow-core units tested in the laboratory at the University of Canterbury).

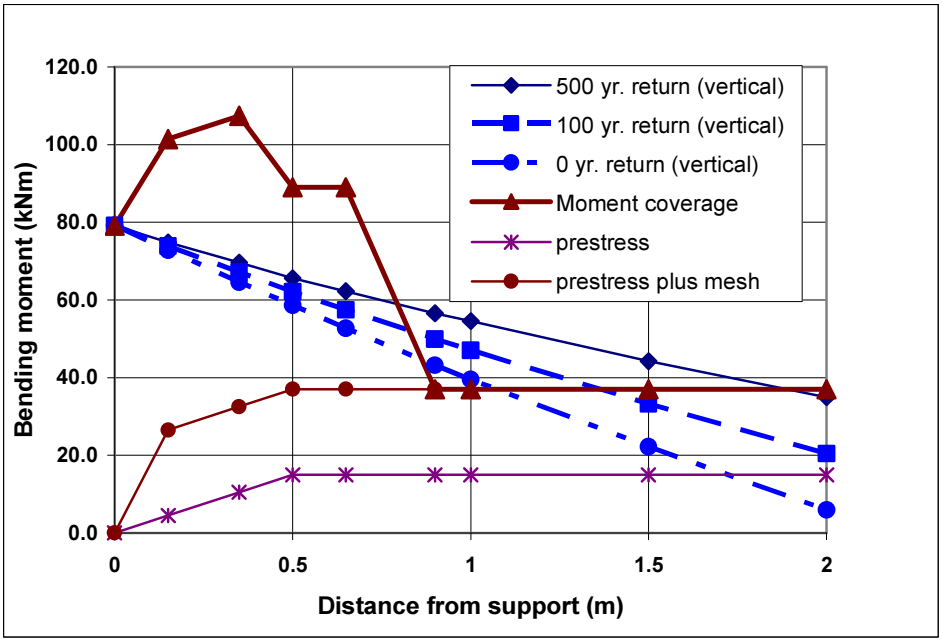

Figure 6-11: Moments demands and moment coverage at crack width of 7.75mm at reinforcement in topping concrete

The no net axial load case is critical for floors with the 300mm deep hollow-core units and the alternative axial tension case with constant bending moment is not critical and does not need to be considered.

The different components of moment coverage provided by the reinforcement are shown on Figure 6-11. The 500, 100 and 0 year return values related to the vertical seismic actions which correspond to 100, 50 and 0 percent NBS of vertical seismic actions in terms of NZS1170.5, clause 3.1.5. It can be seen that there is a short fall in negative moment capacity even if the vertical seismic actions are neglected. Consequently the critical relative rotation between the hollow-core unit and supporting beam is less than that corresponding to a crack width of 7.75mm. If one assumes that the elastic deformations and ratios of plastic deformations in the storey being considered are the same as those used for the loss of support assessment, see Figure 6-6, and the hollow-core units were supported close to the column centre-line, the crack width of 7.75mm corresponds to a rotation between hollow-core unit and support beam of 7.75/(340-30), which equals to 0.025. To get the resultant drift ratio of the storey with this magnitude of crack it is necessary to add in the drift due to deformation in the columns and allow for the rotation of the hollow-core floor due to the application of the end moment. Based on the values in Figure 6-6 the component of storey drift associated with column deformation is 0.006 times 0.2, giving a value of 0.0012 radians, where the 0.006 is the drift ratio associated with elastic deformation and 0.2 is the proportion due to column deformation. Rotation of the hollow-core floor due to continuity induced bending moment (79.1kNm at one end and 0.0kNm at the far end) can be calculated from the elastic properties of the hollow-core floor. With an end moment of 79.1kNm, a transformed second moment of area of close to 4.0 x 10^9mm^4 and an elastic modulus of 30,000MPa, the elastic rotation is 0.0039 radians. Hence summing the drift ratio components (0.025 + 0.0012 + 0.0039) gives a total value of 0.0301. However, there is an appreciable short fall in moment coverage and moment-demand at the critical section with the crack width of

7.75mm. Hence the safe drift ratio limit is appreciable less than 0.0301. Hence a reduced crack width should be tried.

A trial and error approach can be set up to find the crack width and the corresponding storey drift that corresponds to the limiting case where moment coverage just meets the moment demand at the critical section. A crack width of 3.8mm, with an end moment of 72.4kNm leads to the moment coverage just equalling the moment demand when the seismic moments associated with vertical ground motion are ignored, see Figure 6-12. With this condition the storey drift ratio is 0.0171 where the separate components are 0.0123 + 0.0012 + 0.0036. The distribution of bending moment corresponding to this condition is shown in Figure 6-12. To include allowance for the vertical seismic actions it is necessary to relate the limiting drift to the return factor R for the earthquake. This requires a detailed analysis of the building as a whole and hence it is not given here.

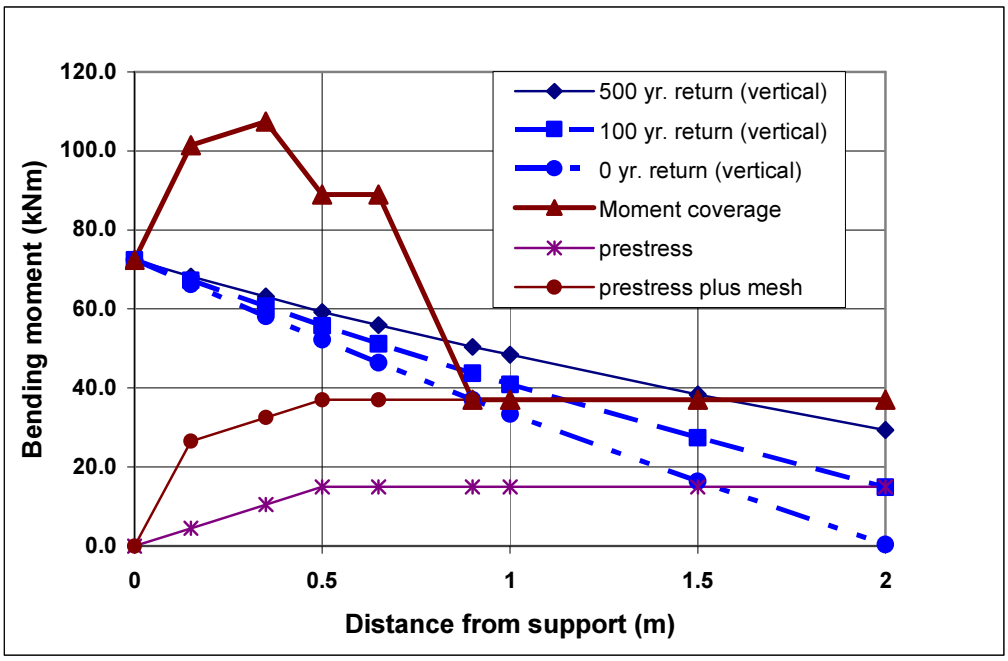

Figure 6-12: Moments demands and moment coverage of reinforcement in topping concrete corresponding to a crack width of 3.8mm at the back face of the unit

6.7 Shear failure in negative moment zones

6.7.1 Background

Continuity reinforcement, which ties hollow-core units and their insitu concrete topping to the supporting structure, can be subjected to high stress levels when cracks are induced due to differential rotation between support and precast unit, elongation of beams and/or differential shrinkage of the floor and other structural elements. As noted in the previous section the resultant forces can induce negative moments, or axial tension and negative moments, into the hollow-core floor near the supports. Flexural cracking may occur due to this action and this can result in the shear strength provided by concrete being limited by flexural shear cracking rather than web shear cracking, which would control if the unit was simply supported. A potential problem here is that the precast units are supplied by the precasters to act as simply supported members. Hence it is likely that in their design the shear strength calculations were based on web shear cracking and not flexural shear cracking. As the ratio of flexural shear cracking strength to web shear

cracking strength is generally considerable less than 1.0 the shear strength may be considerable less than that implied in design tables supplied by precasters for hollow-core units subjected to seismic loading cases. In carrying out an assessment for retrofit it is important to assess the shear strength near the supports of hollow-core floors allowing for continuity bending moments that may be induced in the floor. The critical location is close to the supports.

Analyses of shear stresses in the development zone of a hollow-core unit have indicated that prestress only makes a small contribution to the shear strength provided by concrete unless top pretensioned strands have been used (see Appendix A6). Standard design equations in NZS 3101: 2006 may be used to assess the shear strength of hollow-core floors.

Assessing the ultimate limit state shear strength in the negative moment zone near a support involves the following steps.

1. Determine the magnitude of the critical shear force in the negative moment zone and check that under the critical load combination negative moments act in the critical zone for shear.
2. Check the ultimate limit state criterion for prestressed concrete as set out in NZS 3101: 2006 with amendment 2, using appropriate material strengths.
3. Shears forces associated with vertical seismic ground motions should be assessed on the basis of nominal ductility of the precast units and their concrete topping.

6.7.2 Example of shear strength in flexural tension zone

Figure 6-13 shows the support details for a 300mm hollow-core unit. The span is 12m and the starter bar reinforcement in the 75mm topping concrete consists of 12mm Grade 300 bars at 300c/c. The self weight of hollow-core unit and topping is 5kPa and the added dead load is 0.5kPa. The design live load was 2.5kPa, which for seismic load cases may be reduced to 1kPa. The building containing the floor is located in Christchurch on a type D soil (NZS 1170.5: 2004).

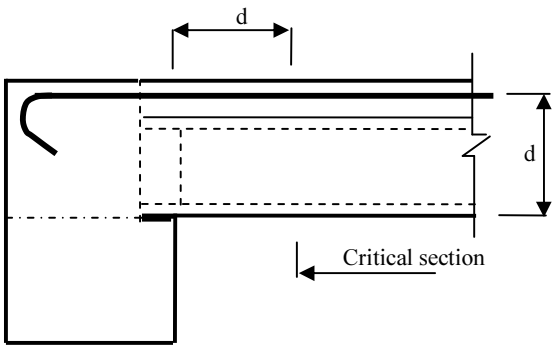

Figure 6-13: Flexural shear strength in negative moment zone

The width of the hollow-core unit is 1.2m, which gives a dead load of 6.6kN/m, a live load of 3kN/m for gravity load combinations and 1.2kN/m for seismic load combinations. The vertical seismic force coefficient for a structural ductility factor of 1.25 and an S_p factor of 0.9 (NZS 3101: 2006) is equal to 0.22 x 0.7 x 3 x 0.9 /1.07, where 0.22 is the basic hazard factor, 0.7 is the coefficient relating vertical seismic forces to horizontal forces, 3 is the spectral shape factor for periods less than 0.5s, 0.9 is the S_p factor and 1/1.07 is k_μ based on a structural ductility factor of 1.25 and a period of vibration of 0.2s. The change in k_μ for different fundamental periods of the floors in the typical range of 0 to 0.3 is small and for practical purposes it may be ignored. This gives a seismic coefficient of 0.39.

The critical shear force is located at a distance of an effective depth, d, away form the support (NZS3101: 2006, Clause 19.3.11.2.4(b), (i)), and the design shear strength provided by concrete is given by;

$$\phi V = v_c A_{cv} \qquad \text{(Eqn. 6-3)}$$

For flexural shear strength v_c is equal to $0.2\sqrt{f_c'} \leq 1.30\,MPa$ for flexural shear cracking and for a 300mm deep hollow-core unit with 75mm topping (note the value of v_c changes with different depths and shapes of hollow-core unit), A_{cv} is equal to the effective depth times minimum web width (NZS 3101: 2006, clause 19.3.11.2.4). For a 300mm hollow-core unit the effective width of the web is approximately 200mm and the effective depth for negative flexure is 335mm measured to centre of bars in 75mm concrete topping. This gives the design shear strength of 65.8kN at a section located 335mm from the edge of the support based on a concrete strength of 42MPa in the precast unit.

For the corresponding shear strength based on web shear cracking, v_c is given by;

$$v_c = 0.3(\sqrt{f_c'} + f_{pc} + f_{sw}) \qquad \text{(Eqn. 6-4)}$$

Where f_{pc} and f_{sw} are the stresses at the neutral axis level due to prestress and self strain actions respectively. The critical section is located h/2 from the face of the support (NZS 3101: 2006, clause 19.3.11.2), which is in the transfer length of the strands. Conservatively taking the sum of f_{pc} and f_{sw} to be zero gives a design shear strength of 98.4kN.

The critical design action shear force for gravity loads (1.2G + 1.5Q), is 70kN, and the corresponding seismic load case shear ($G + \gamma Q + E_v$) is 54kN. For the seismic load case flexural shear cracking controls the shear strength. For the gravity load case it is less certain as any upward deflection due to prestress and creep would have to be overcome before negative moments could build up in the floor near the support. For this case the flexural shear strength is adequate for the seismic case, and sufficiently close for the gravity load case not to require retrofit.

It should be noted that for 400 deep hollow-core units the value of v_c is considerably smaller (NZS3101: 2006, 19.3.11.2) than for the 300mm hollow-core unit. Furthermore for this depth of unit clause 9.3.9.4.13 requires shear reinforcement to be used where the shear force exceeds 50% of the shear force resistance provided by concrete.

6.8 Incompatible displacements between hollow-core units and other structural elements

6.8.1 Introduction

Hollow-core units are stiff and relatively brittle elements. Consequently when differential displacement develops between a hollow-core unit and an adjacent beam, or other structural element, force transfer between the two can be high. As illustrated in Section 5.4.5 this can result in the web splitting, which in certain cases can lead to failure. NZS 3101: 2006 requires that a flexible linking slab is used between hollow-core units and beams, or other structural elements, which may sustain a differential deflection with an adjacent hollow-core unit. By this means any force transfer to the hollow-core unit can be limited to levels that cannot cause structural distress. However, floors designed before 2004, when NZS 3101:1995 was amended in 2004, are unlikely to contain flexible linking slabs.

Limited web cracking associated with differential displacement between a beam and hollow-core unit is of little concern provided the extent of this cracking is limited. When web cracking develops the portion of structure above the split in the webs can act as a slab spanning between

the un-cracked portion of hollow-core unit and an adjacent structural element such as a beam, while the prestressed portion below the web cracks can carry its own dead load for some distance. However, excessive cracking has been found in a test to contribute to premature collapse, see Figures 5-12 and 5-13. The situation is particularly critical if positive moment cracks have formed next to the supports.

The ultimate limit state criterion for assessing damage associated with web cracking is based on limiting the extent of web cracking and not on eliminating it. To achieve this objective the proposed criterion is to limit the differential vertical displacement between a hollow-core unit and an adjacent beam or other structural element to a value, δ_v, given by Equation 6-5;

$$\delta_v \leq \frac{750}{\phi_{df}\,(25+t)}\ (mm) \qquad \text{(Eqn. 6-5).}$$

It should be noted that in calculating the displacement allowance needs to be made for the structural performance factor, S_p (see 3.3.2). In Equation 6-5 *"t"* is the thickness of the topping concrete and the 25mm is an allowance for the minimum depth of concrete above the voids in the hollow-core unit and ϕ_{df} is the deformation factor (1.25). With a 75mm thick topping this gives a limiting differential displacement of 6.0mm.

Figure 6-14 shows a hollow-core unit adjacent to a reinforced concrete beam. Flexural deformation of the beams and columns causes differential displacements to develop between the hollow-core unit and the beam. Three separate components of deformation can be identified, as illustrated in Figure 6-15. These components consist of;

1. Elastic deformation of the beam;
2. Deformation due to the formation of a plastic hinge in the beam adjacent to the column face;
3. Deflection of the hollow-core unit due to the support points being displaced from the centre-line of the columns.

The differential displacement can be found by adding the three components of deflection together at the critical section. On the basis of a number of approximations, which are set out in Appendix A, Section A7, Table 6-2 has been prepared. This table relates the peak vertical deflection of a beam due to elastic and plastic deformation for different levels of rotation of the columns. Other variables considered in the table include the grade of longitudinal reinforcement in the beam, the ratio of column depth to beam depth, h_c/h_b and the ratio of the bay span length being considered to the beam depth, L/h_b, where L is the span length measured between column centrelines.

The vertical displacement of the hollow-core unit due to rotation of the columns and the offset of the support point from the column centre-line can be calculated from geometry, see lower figure in Figure 6-15. This component of displacement at the critical section is subtracted from the corresponding displacement due to elastic and plastic deformation of the beam to give the critical differential deflection. The location of the peak displacement changes with different structural dimensions. However, for practical purposes it may be assumed to be at a distance of $0.9h_b$ from the column face where the ratio of the span of the bay to the beam depth is equal to or exceeds 8, and at a distance of $0.7h_b$ where the ratio of span of bay to beam depth is equal to or less than 6. Between these limits interpolation may be used.

Table 6-2: Vertical displacement of beam due to elastic and plastic deformation as a percentage of beam depth

Column rotation @ level	Ratio of column depth to beam depth, h_c/h_b								Critical section $0.9h_b$ from column face. For span of bay, L, to beam depth, h_b, equal to **10.** $\frac{L}{h_b}=10$
	1.2		**1.0**		**0.8**		**0.6**		
	300	**500**	**300**	**500**	**300**	**500**	**300**	**500**	
0.030	2.57	2.67	2.32	2.43	2.07	2.19	1.83	1.94	
0.025	2.16	2.27	1.96	2.07	1.76	1.87	1.55	1.67	
0.020	1.76	1.87	1.60	1.71	1.44	1.55	1.28	1.39	
0.015	1.36	1.47	1.24	1.35	1.12	1.23	1.00	1.12	
0.010	0.96	1.06	0.88	0.99	0.80	0.92	0.72	0.83	

Column rotation @ level	Ratio of column depth to beam depth, h_c/h_b								Critical section $0.9h_b$ from column face. For span of bay, L, to beam depth, h_b, equal to **8.** $\frac{L}{h_b}=8$
	1.2		**1.0**		**0.8**		**0.6**		
	300	**500**	**300**	**500**	**300**	**500**	**300**	**500**	
0.030	2.38	2.45	2.16	2.23	1.93	2.01	1.70	1.78	
0.025	2.00	2.07	1.82	1.89	1.63	1.70	1.44	1.51	
0.020	1.69	1.69	1.48	1.55	1.33	1.40	1.17	1.25	
0.015	1.24	1.31	1.13	1.21	1.02	1.10	0.91	0.99	
0.010	0.86	0.93	0.79	0.86	0.72	0.80	0.65	0.73	

Column rotation @ level	Ratio of column depth to beam depth, h_c/h_b								Critical section $0.9h_b$ from column face. For span of bay, L, to beam depth, h_b, equal to **6** $\frac{L}{h_b}=6$
	1.2		**1.0**		**0.8**		**0.6**		
	300	**500**	**300**	**500**	**300**	**500**	**300**	**500**	
0.030	2.30	2.33	2.08	2.11	1.85	1.88	1.62	1.65	
0.025	1.93	1.95	1.74	1.77	1.55	1.58	1.36	1.39	
0.020	1.55	1.57	1.40	1.43	1.25	1.28	1.10	1.13	
0.015	1.17	1.20	1.06	1.09	0.95	0.98	0.83	0.87	
0.010	0.79	0.82	0.72	0.75	0.65	0.68	0.57	0.61	

Column rotation @ level	Ratio of column depth to beam depth, h_c/h_b								Critical section $0.9h_b$ from column face. For span of bay, L, to beam depth, h_b, equal to 4 $\frac{L}{h_b}=4$
	1.2		**1.0**		**0.8**		**0.6**		
	300	**500**	**300**	**500**	**300**	**500**	**300**	**500**	
0.030	1.80	1.80	1.68	1.69	1.53	1.54	1.37	1.38	
0.025	1.50	1.50	1.40	1.41	1.28	1.29	1.14	1.15	
0.020	1.20	1.20	1.12	1.13	1.03	1.04	0.92	0.93	
0.015	0.90	0.91	0.84	0.85	0.77	0.78	0.69	0.70	
0.010	0.60	0.61	0.57	0.57	0.52	0.53	0.47	0.48	

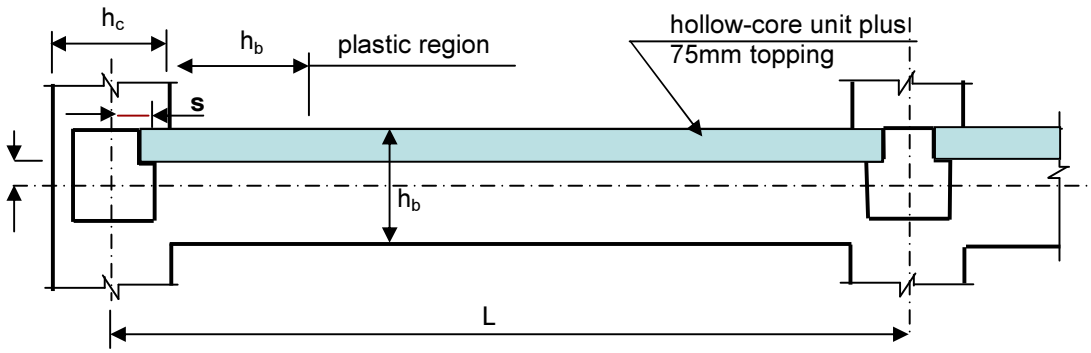

Figure 6-14: Elevation on hollow-core unit adjacent to a beam

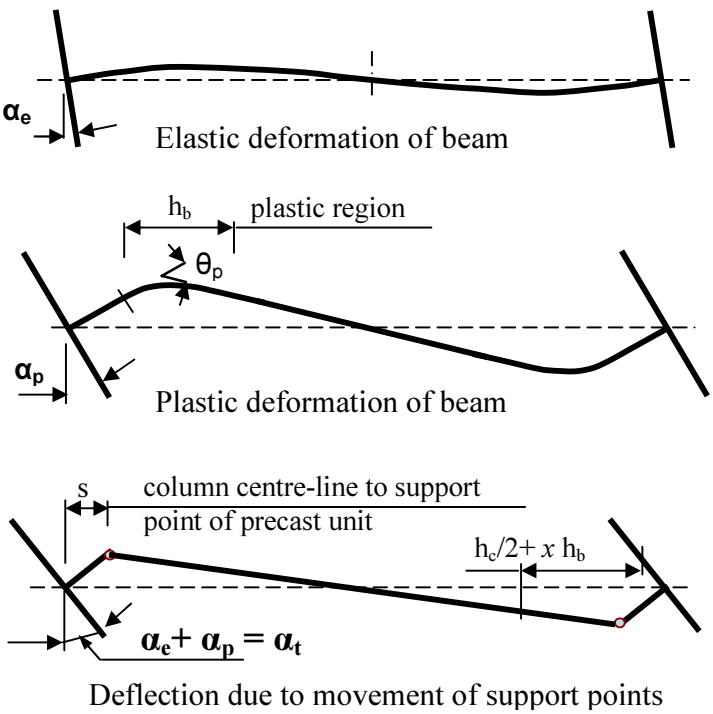

Table 6.2 gives the maximum vertical displacement due to elastic and plastic deformation of beam.

The vertical displacement due to movement of supports needs to be deducted.

The maximum displacement may be assumed to occur at a distance of xh_b from the column face, where x is equal to 0.7 for $L/h_b \leq 6.0$ and 0.9 for $L/h_b \geq 8.0$

Figure 6-15: Relative deflection components of beam and adjacent hollow-core unit

6.8.2 Example of assessment for web cracking

Assume a hollow-core unit is mounted next to a beam in a similar arrangement to that shown in Figure 6-14. The span of the bay, L, is 8m. The beam has a depth (h_b) of 1,000mm and it is reinforced with Grade 300 longitudinal reinforcement. The column depth, h_c, is 800mm and the thickness of insitu concrete topping on the hollow-core unit, *t*, is 65mm. The hollow-core unit is supported at a distance, *s*, of 350mm from the column centre-line.

Find the rotation of the column at the level of the beam that corresponds to the maximum permitted displacement between the hollow-core unit and the beam in the ultimate limit state.

From the geometry of the span and support point of the hollow-core unit, see lower figure in Figure 6-15, the vertical displacement of the hollow-core unit due to rotation of the column can be readily found. The critical section is located at a distance of $0.9h_b$ out from the column. If the column rotation is α_c radians then the displacement at the critical section is given by;

$$\alpha_c \, s \frac{(L/2 - s - 0.9\,h_b)}{(L/2 - s)} = 264\,\alpha_c \qquad \text{(Eqn. 6-6)}$$

Where L/2 is 4,000, ***s*** is the distance from column centre-line to support point of hollow-core unit, which is equal to 350mm, and h_b is 1,000mm.

The limiting differential displacement between a hollow-core unit and an adjacent beam is given by Equation 6-5. With a topping thickness of 65mm the value is 6.67mm. Allowance has to be made for the S_p factor, and to allow for this the limit becomes S_p *times 6.67*. As S_p varies with the structural ductility factor different values may be required between 0.9 and 0.7 depending on the required level of ductility at the critical inter-storey drift that causes the web splitting criterion to be reached. For this example it is assumed that the structural ductility factor is equal to 2, which

gives and S_p factor of 0.81 (NZS 3101: 2006), with a limiting differential displacement of 0.81 x 6.67 = 5.4mm. A trial and error is one method of finding the solution as set out in Table 6-3.

From the table the critical differential displacement of 5.4mm lies mid-way between the values for a column rotation of 0.010 and 0.015. By interpolation the limiting column rotation is 0.0125 radians. Generally the drift due to deformation in the columns is small, provided they remain in their elastic range. Hence for practical purposes the limiting drift ratio may be taken as 0.0125. However, the drift ratio due to elastic deformation in the columns could be added to this value, which can be used to determine percentage of New Building Standards (%NBS).

Table 6-3: Example of calculation of column rotation corresponding to limiting differential vertical displacement between a beam and hollow-core unit

Try column rotation (radians)	Deflection due to offset of hollow-core support point[1] (mm)	Deflection due to elastic plus plastic deformation[2] (mm)	Differential deflection (mm)
0.030	7.9	19.3	11.4
0.025	6.6	16.3	9.7
0.020	5.3	13.3	8.0
0.015	4.0	10.2	6.2
0.010	2.6	7.2	4.6

[1] Calculated from Equation 6-6
[2] h_b times appropriate value in Table 6-2 but note table values given as %

6.9 Torsion induced in hollow-core units

6.9.1 Background

Hollow-core units with concrete topping predominately resist torsion by a shear flow in the outside webs, the soffit slab and the concrete topping. This behaviour is similar to that of a box section and it results in a high torsional stiffness. Generally in a hollow-core floor torsional actions associated with patch loading are not important in buildings unless high concentrated loads are applied. This is due to the floor having a high flexural stiffness in the direction along the units and a low flexural stiffness in the transverse direction, which gives a predominant one way action. However, problems may arise when torsional actions are induced due to differential displacement of supports, as illustrated in 5.4.6, Figure 5-3 and in Figure 6-16.

As noted in Section 5.4.6 and illustrated in Figure 6-16 differential deflection of supports at the ends of hollow-core units can induce compatibility torsion in hollow-core units. While the torsional strength is not important it is essential to limit the twist so that the flexural and shear capacities of the hollow-core units are not destroyed by diagonal cracking associated with torsion.

The proposed design limit for assessing the ultimate limit state for torsion in hollow-core floors is taken as the larger of;

- Two and a half times the value corresponding to that sustained at the nominal torsional cracking torque divided by the deformation factor, ϕ_{df} , (1.25); or
- The maximum torsional rotation sustained by the insitu concrete topping plus the minimum depth of concrete to the top of the voids in the hollow-core unit when this depth of concrete is assumed to act as a beam without torsional reinforcement. Based on this assumption the maximum level of twist can be calculated from NZS 3101; 2006 (clause 7.6.1.2) for a member without torsional reinforcement.

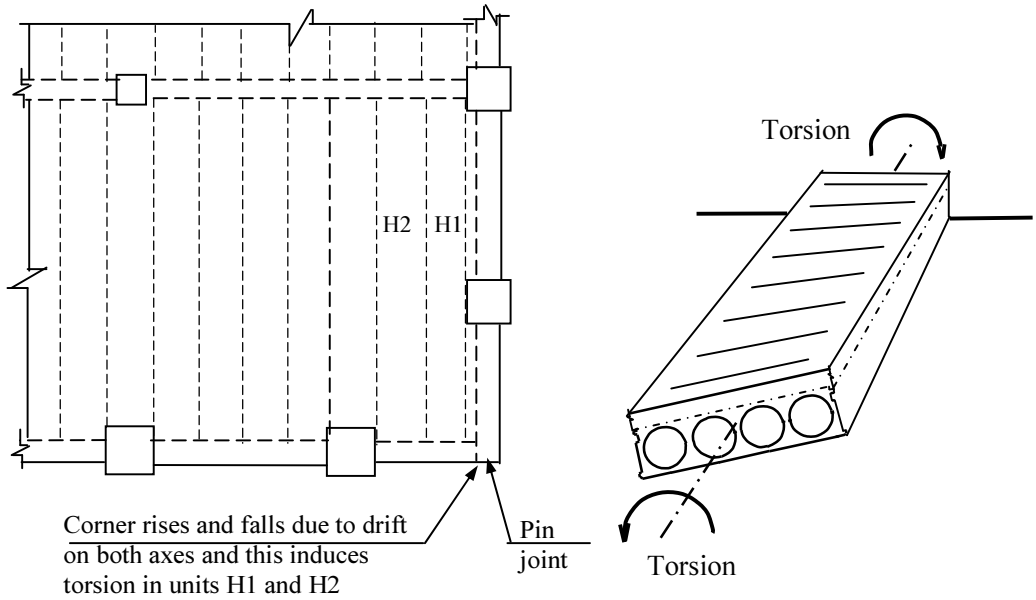

(a) Plan on corner of frame building without corner columns

(b) Torsion induced in hollow-core unit close to corner

Figure 6-16: Torsional actions induced by compatibility in a hollow-core floor

The following steps are required;

1. Assess the torsional cracking of the hollow-core unit with insitu concrete topping at the critical location in the section. Assume that the longitudinal prestress at this location is equal to 1/3 of the prestress at the neutral axis after long term loss has occurred.
2. Calculate the torsional cracking moment and stiffness values on the basis of the approach given in NZS3101: 2006 with Amendment 2 (Note in the example below the basic concepts on which the NZS3101: 2006 Standard are based are used rather than the design equations).

6.9.2 Example of assessment for limit of torsional twist applied to a hollow-core floor

Find the limiting twist that can be sustained by a 12m (Dycore Partek) hollow-core unit with 75mm topping of 30MPa concrete, see Figure 6-17. The initial prestress force is 1,377kN (nine 12.9 mm strands and two 11.3mm strands). Allowing for a long term loss to 0.82 of the initial prestress force gives a prestress level of 7MPa. Taking a third of this stress gives an assumed prestress level at the critical section of 2.3MPa. Assuming the concrete strength, f_c', is 42MPa the effective tensile strength in the webs or soffit slab, f_{dt}, is, $0.33\sqrt{f_c'}$, which gives a value of 2.14MPa.

NZS 3101: 2006 bases torsional calculations on an equivalent tube where the shear stress in the wall of the tube is assumed to be uniform. Criteria are given for the effective wall thicknesses of the tube. From NZS 3101: 2006 (with Amendment 2) the maximum wall thickness of the equivalent tube is equal to the smaller of $0.75\,A_{co}/p_c$ or the actual wall thickness (see NZS3101: 2006, clause C7.6.1.6). For the external webs the thickness is about 35mm, while for the soffit slab the thickness varies with a minimum of 25mm below the ducts and this is used for assessing

torsional cracking stress. However, at other locations in the soffit the effective thickness is greater than this minimum value. Assuming a value of 25mm would under-assess the effective torsional stiffness. To allow for this effect the wall of the tube representing the soffit should be increased for stiffness calculations and it is suggested that an average value of 35mm be used for this purpose. For the composite hollow-core insitu section the effective thickness of the top wall of the tube is 107mm.

For the insitu concrete and the concrete immediately above the ducts in the hollow-core the depth is (75 +25)mm. This assumes the concrete cover above the top of the void in the hollow-core unit is 25mm. Dimensions vary between individual units and considerable differences exist with different forms of hollow-core unit.

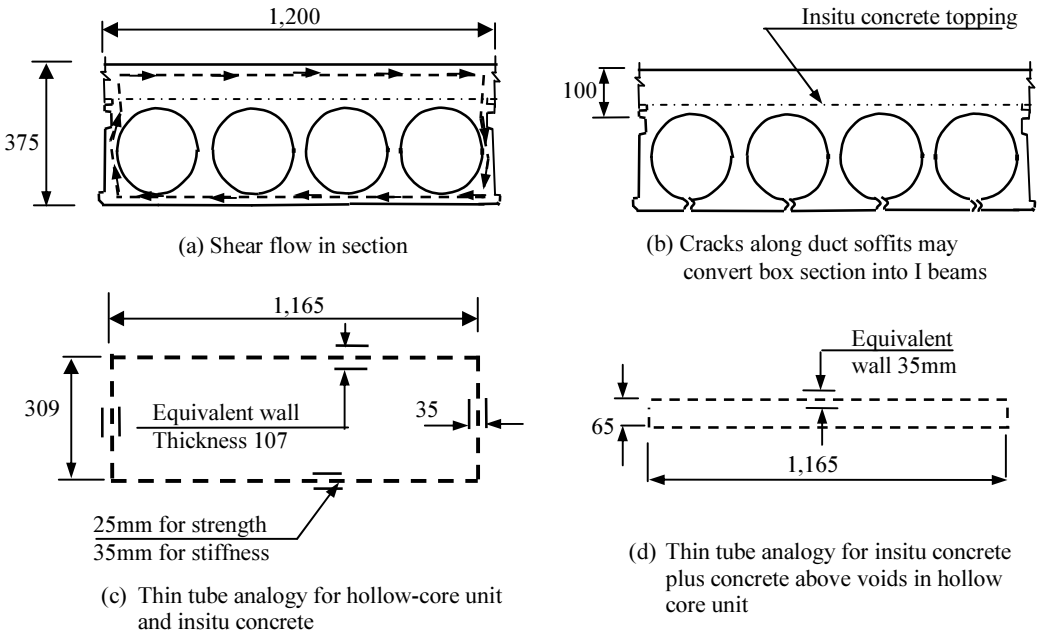

Figure 6-17: Equivalent tubes for assessing torsional cracking

With the wall thicknesses for the equivalent tubes defined, as detailed above, the dimensions to the tube centre-lines can be calculated. These values are summarised in Figure 6-17 (c).

The nominal torque cracking moment as defined in NZS 3101: 2006, clause C7.6.2.1. The critical location is in the soffit slab is where the thickness is a minimum, namely 25mm. The torsional shear flow, q, is related to the torsional moment by equation;

$$2\,A_{co}\,q = 2\,q\,b_t\,d_t = T \qquad \text{(Eqn. 6-7)}$$

Where A_{co} is the area enclosed by the equivalent tube. The limiting shear stress v_{tn} is defined by the principal tensile stress at the critical location and it is equal to $f_{dt}\sqrt{\left(1+\frac{f_{pc}}{f_{dt}}\right)}$. Taking f_{pc} equal to 1/3 of the prestress level at the neutral axis gives a critical shear stress of 3.09MPa, with a corresponding torsional shear flow of 77.25N, and a nominal torsional cracking torque of 55.6kNm.

The stiffness can be calculated by equating internal strain energy and the work done by the external forces. The energy from the external forces is equal to ½ $T\,\theta$ where T is the torque and θ

is the angle of twist over the length being considered. The internal energy is equal to the strain energy associated with the shear deformation round the section. The shear modulus of concrete is taken as 0.4 E_c, which gives values of 10,030 and 11,370MPa for the insitu and precast concrete respectively. Table 6-4 summarises the internal energy calculation.

Hence the total energy in a 1 mm length is 16.6Nmm. Over a length of 12,000mm this gives an internal energy of 0.199kNm. As this value is equal to $0.5\ T\ \theta$, which with a torque of 55.6kNm gives an angle of 0.00716 radians. The limiting twist to prevent diagonal cracks from destroying the flexural strength is taken as $2.5/\phi_{df}$ times the twist corresponding to torsional cracking giving a difference in height over the width of the unit at the support of 17mm.

Table 6-4: Internal energy /mm of length in equivalent tube at cracking moment

Location of wall in tube	Shear stress q/t (MPa)	Shear force q x length (N)	Shear strain in wall	Contribution to strain energy (Nmm)
Top	0.722	90,000	7.2×10^{-5}	3.24
Webs	2.207	47,740	19.4×10^{-5}	4.63
Soffit	2.207	90,000	19.4×10^{-5}	8.73

For the insitu concrete topping plus precast concrete above the voids the effective the limiting torsional moment that may be assumed to act without provision of reinforcement is defined in NZS 3101; 2006, clause 7.6.1.2, as given by Equation 6-8;

$$T_{\max} = 0.1\phi\, A_{co}\, t_c \sqrt{f_c'} \qquad \text{(Eqn. 6-8)}$$

Where A_{co} is the area of the section and t_c is equal to three quarters of section area divided by perimeter of section $(A_{co}0.75\ /p)$, which gives a value of 35mm. With these values T_{max} is 1.73kNm. The limiting twist corresponding to this torque can be calculated following the approach set out in Table 6-4, only as wall thickness is uniform a new table is not required.

For the insitu slab and precast concrete above the voids, with reference to Figure 6-16, the shear flow (q) corresponding to a torque of 1.73kNm is 11.4N, with an average shear stress of 0.33MPa. The internal strain energy is given by;

$$q\,(1{,}165+110)\frac{0.33}{10{,}030}12{,}000 = 5{,}540 Nmm$$

Hence ½ T θ = 5,540Nmm, where T is 1,732,000Nmm, giving a twist along the member of 0.0064 radians, which is less than the critical twist of the full section, and hence it is not critical.

6.10 Hollow-core floor acting as a diaphragm

6.10.1 Background

Floors in buildings are required to distribute forces to lateral force resisting elements in the building and to tie the structure together to ensure the structure is robust. In a major earthquake elongation of plastic hinges in beams can induce wide cracks in certain locations in floors containing precast units. The influence of these cracks on the ability of the floor to act as a diaphragm is considered in this section.

Concrete floors built up with precast prestressed units and insitu concrete contain major discontinuities in strength close to the support locations of the precast units. The termination of

the pretension strands at the ends of the pretension units creates a weak section relative to the remainder of the floor. A consequence of this is that any differential expansion or contraction of the floor relative to the supporting structure can open up wide cracks at the support locations of the floor. While there are several causes of differential expansion or contraction of floors relative to the supporting structure a major concern is the expansion of the supporting structure due to elongation of plastic hinges in beams in a major earthquake.

Figure 6-18 shows the likely locations of wide cracks in part of a floor caused by elongation of plastic hinges in beams. In assessing the potential seismic performance of a building it is important to assess the influence these cracks may have on the ability of the floor to tie the structure together and to distribute the seismic forces to the lateral force resisting elements in the building. In this context a wide crack is defined as one where reinforcement crossing the crack has been strained into the yield range.

It has been standard practice in the recent past to design floors for diaphragm action using the strut and tie method. With this approach struts, representing compression forces in the concrete, bear directly against columns or walls to transmit diaphragm shear forces into lateral force resisting elements. However, with the formation of wide cracks between columns or walls in a floor could prevent the development of a number of critical struts in the assumed strut and tie mechanism. Hence in assessing a floor it is necessary to identify the location of wide cracks and assess if mechanisms, which do not involve the transmission of compression forces across wide cracks, can sustain the required level of diaphragm action.

6.10.2 Location of wide cracks

Tests have shown that elongation of plastic hinges in beams can result in intermediate columns in a bay, such as column B on line 1 in Figure 6-18, being pushed away from the floor due to elongation and resultant axial compression force in the plastic hinges immediately adjacent to the column. If this occurs over several levels the lack of restraint to the column could result in a buckling failure. To prevent this separation such columns should be tied into the floor with reinforcement that satisfies the requirements of clause 10.3.6 in NZS3101: 2006. Tests have shown that if this reinforcement is in place and there is a linking slab connecting the intermediate column to the adjacent precast unit, which satisfies the requirements in clause 18.6.7.2 in NZS3101; 2006, wide cracks do not develop and consequently strut forces can act directly against the column. However, if there is no linking slab, or the linking slab is not sufficiently flexible, differential movement between the precast units and the column can break up the concrete close to the column and destroy the load paths of the struts.

The length of wide cracks extending from a column along the perimeter beams (lines 1 and A) depends on the relative flexural strength of the beam and the continuity reinforcement tying the floor to the beam. For practical purposes the length of such a crack, L_{crack}, can be assessed from;

$$L_{crack} = \sqrt{2.75\, M_{ny} / f} \qquad \text{(Eqn. 7-9)}$$

Where M_{ny} in the nominal flexural strength of the beam about a vertical axis calculated allowing for the axial force acting in the beam and f is the lateral force per unit length provided by the continuity reinforcement tying the floor to the perimeter beam. The axial force acting on the perimeter beam is equal to the tension force resisted by the slab that acts with the beam as defined in clause 9.4.1.6.2 in NZS3101: 2006, and f is calculated on the assumption that the reinforcement has its design yield strength (lower characteristic strength).

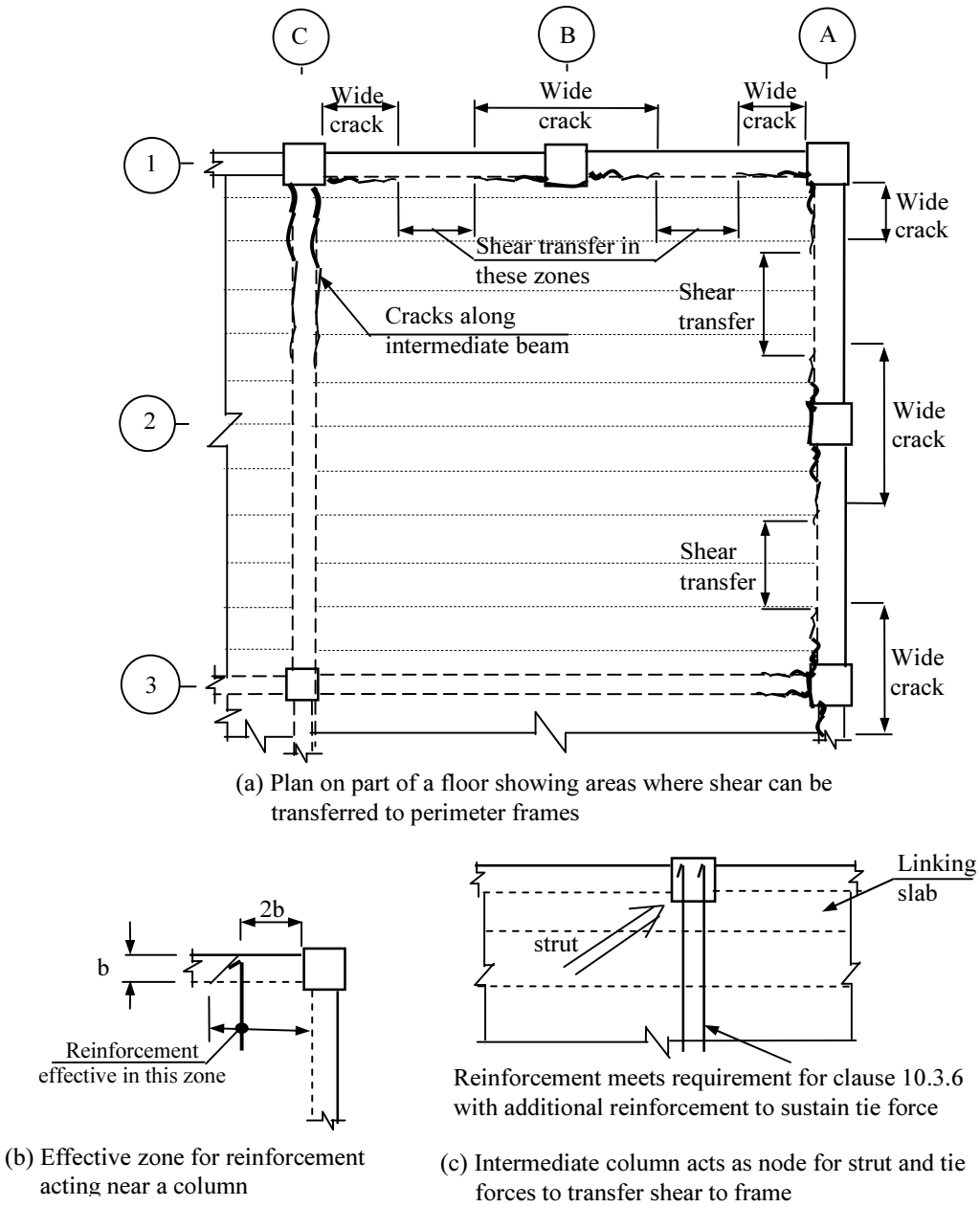

(a) Plan on part of a floor showing areas where shear can be transferred to perimeter frames

(b) Effective zone for reinforcement acting near a column

(c) Intermediate column acts as node for strut and tie forces to transfer shear to frame

Figure 6-18: Location of wide cracks in a hollow-core floor

The length of a wide crack along an internal beam, which supports precast floor units and is transverse to the perimeter frame, such as the beams on lines C and 3 in Figure 6-18, depends on the relative magnitudes of the inelastic deformation sustained by the beams in the perimeter frame and the adjacent internal frame, such as the beams on line 1 and 3 in the figure. Often the internal frames are designed to provide support to the floors and they have not been proportioned to provide significant lateral force resistance. As a consequence these beams can have longer spans and smaller depths than the beams in the perimeter frame and under seismic actions they may sustain little if any inelastic deformation. Where this is the case the wide cracks along each side of the transverse beams have been found to extend a distance of about 3 beam depths from the perimeter column. However, where the beams in the adjacent internal frame (on line 3 in Figure

6-18) sustains significant inelastic deformation a wide crack can be expected to extend for the full length of the transverse beam.

6.10.3 Viable force transfer mechanisms between floors and lateral force resisting elements

Force transfer across wide cracks can occur by continuity reinforcement acting in tension or to a limited extent in compression and or by this reinforcement acting as a dowel. In an extreme situation this reinforcement may act to transfer shear by kinking of the reinforcement across the crack. However, the displacement required to sustain force by kinking is of the order of the diameter of the reinforcement and this magnitude of displacement would destroy shear transfer by dowel action and/or by strut and tie action in other regions of the beam floor interface.

Further work is required to find or develop suitable equations for dowel action of reinforcement.

The Strut and Tie method, which is detailed in NZS3101: 2006 Appendix A, may be used to assess the shear capacity of regions away from wide cracks, see regions labelled as shear transfer Figure 6-8. In evaluating the shear transfer the maximum compression stress in the insitu concrete should be limited to $0.51 f_c'$ (coefficient 0.6 x 0.85) to comply with the Standard.

6.10.4 Assessment of diaphragm forces

In design diaphragm actions are often assessed on the basis of the simplifying assumption that the floors act as rigid diaphragms. Appendix B outlines a simple method of assessing diaphragm forces in floors. Where high shear forces are induced due to the transfer of shear force from one lateral force resisting element to another, allowance for elastic and an appropriate amount of inelastic deformation in the diaphragm can make a significant reduction in the diaphragm forces. In such cases an acceptable amount of inelastic deformation should be assessed on the basis of the magnitude of expected crack widths induced by creep, shrinkage, thermal strains and elongation of plastic hinges together, with acceptable non-linear deformation of reinforcement or concrete close to the interfaces of the lateral force resisting elements and the floor. Section A9 in Appendix A outlines how inelastic demands on diaphragms associated with redistribution of actions can be assessed.

Chapter 7

Design of Hollow-core Floors

7.1 Introduction

This chapter contains recommendations for the design of hollow-core floors for seismic resistance, which are consistent with the design rules in NZS3101: 2006. In section 2 general aspects that should be considered in deciding on the type of floor to be used in multi-storey buildings are discussed. In section 3 the detailed requirements of current structural standards (2010) that relate specifically to hollow-core floors are discussed together with some additional aspects, which are not currently dealt with in structural standards, but also should be considered in the structural design of hollow-core floors.

7.2 General considerations for design of hollow-core floors

7.2.1 Choice of type of precast floor units

There are several different forms of precast floor units available in New Zealand. All types are currently reinforced with pretensioned strands. The different forms include hollow-core, double tee, rib and infill and flat slabs. The usual practice in New Zealand is to place the precast units in position and then connect them together by adding an insitu topping concrete, which generally is reinforced by 10 and/or 12mm deformed bars. Prior to 2006 mesh reinforcement was generally used but this is not recommended due to its low ductility. The addition of the reinforced topping concrete has three purposes, namely;

- It enables any unevenness due to differences in the shape of precast units to be evened out allowing a flat floor to be produced;
- When the insitu concrete sets it bonds to the precast components giving a composite member, which appreciable stiffens the floor by increasing the second effective second moment of area and by increasing the amount of two way action that can occur when concentrated loads act on the floor;
- The reinforced insitu concrete topping enables the floor to act as a diaphragm and to tie the structure together. This increases the robustness of the structure and enables the floor to transfer lateral forces due to wind or seismic actions to the different lateral force resisting elements in the structure.

The choice of the type of precast floor units selected for a building should depend on the characteristics required of the floors as well as availability, cost considerations, speed of erection and fire rating. Of the readily available different types of precast floor units the “Rib and Infill” form gives the lightest floors, which has the advantage of reducing seismic actions and foundation forces. However, this form has the disadvantage of giving more lively floors compared with hollow-core or double tee units. The hollow-core and double tee sections have added mass, which can be an advantage in terms of thermal stability and sound transmission through a floor, particularly with hollow-core floors. Fire rating needs careful consideration as at present (2010) there are a number of unanswered questions relating to the performance of New Zealand hollow-core floors in fires. This aspect is briefly discussed in Section 7.4.

There are some situations where hollow-core units in a floor could potentially be subjected to appreciable twisting in torsion due to seismic actions. It is strongly advised that in these situations the use of hollow-core units should either not be used, or steps should be taken to exclude possible detrimental actions. Unfortunately there is little relative relevant research on torsional response of hollow-core units in floors (see Appendix A8). There are two potential problems with torsional response;

- A very limited number of tests of individual hollow-core units have indicated that when the resultant torsional twist exceeds approximately two and a half times the

twist leading to torsional cracking the growth of diagonal cracks destroys the flexural and shear capacities of the unit, see Appendix A8;

- When a hollow-core unit is subjected to rotation about its longitudinal axis the projection of one of the diagonals in the unit in the plane of the floor increases in length, see Figure 7-1. This lateral expansion is likely to be partially restrained by the adjacent floor members if the units are in contact with each other. The resultant restraint forces would generally be restrained by end diaphragms formed by infill of concrete in the ducts at the ends of the units. However, the typical length of infill is only 75mm and this may not be adequate. If these end diaphragms are inadequate to resist the forces, or if twisting occurs away form the supports, the resultant diagonal compression force could induce shear and bending moments in the webs, which might result in extensive cracking of the webs and contribute to premature failure. The significance of this action can be expected to increase with the depth of the hollow-core floor. Leaving a small gap between members would eliminate this potential problem.

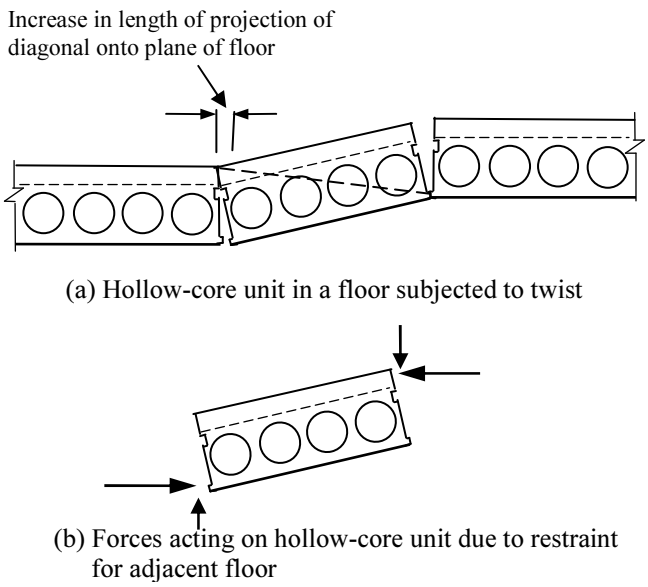

Figure 7-1: Restraint forces acting on a hollow-core unit due to rotation

There are a number of situations where the seismic response of a building could cause one or more hollow-core units may be subjected to rotation about their longitudinal axes. One situation is where hollow-core units are supported on a member which bends or rotates significantly about a horizontal axis normal to the centre-line of the beam. This situation occurs where hollow-core units are supported on beams in bays containing eccentrically braced frames, see Figure A-32, or on beams in buildings with moment resisting frames that do not have corner columns, see Figure 6-16. It can also arise where hollow-core units are supported on slender structural walls or on beams with act as coupling beams in coupled shear walls structures.

7.2.2 Design of hollow-core units

In addition to carrying out the detailed design requirements, which are described in Section 7.3, structural designers should also ensure that that the hollow-core units supplied by the precaster satisfy the relevant requirements of current structural standards (NZS 1170 and NZS 3101). Where designs are based on structural tests rather than satisfying established code criteria for flexure, shear, development etc, the designer should ensure that the design complies with the requirements given in Appendix B of AS/NZS1170, with particular attention to clause B1.2, which requires the reliability of such design criteria to be equal to or

greater than that obtained by design based on calculation using the appropriate design Standards. In determining design criteria from tests allowance should be made for the strength reduction factor. Table B1 defines the number of tests required to establish a nominal strength. However, a sufficient number of tests must be carried out covering the full ranges of sizes and materials used in their production to determine the appropriate coefficients of variation of strength required when using Table B1.

In assessing strengths based on test results it is essential to ensure that the mode of testing does not result in an artificial increase in strength. There are three aspects which should be considered.

1 Particular attention is required on the type of support condition used during the tests. Where units are supported on mortar, or on steel or concrete blocks, high friction forces can develop and these can result in significant increases in shear and flexural strengths. To eliminate this artificial increase in strength one of the supports should be through a roller or a low friction bearing.

2 A second possible cause of increase in strength is when test loads are applied close to a support. Any load which does not leave a clear gap of at least two and a half times the depth of the member between the edge of the support and the closest edge of the loaded length has the potential to increase the shear strength significantly.

3 A further potential problem is where the hollow-core units are assumed to act as simply support members and tests are used to determine the design criteria for shear. However, when these units are installed in a building the simple support condition is no longer fully valid. Continuity reinforcement is placed in broken out webs and/or in topping concrete to tie the floor to the supporting structure and any relative rotation or movement between the hollow-core units and their supporting structure can induce negative moments and axial tension into the floor near the supports. Flexural cracking associated with these moments can significantly reduce the shear strength, as the critical condition changes from that associated with web shear cracking to flexural shear cracking (see Section 6.7).

7.3 Detailed requirements for seismic design of hollow-core floors

All references in this section to clauses in Standards are given in italics and references to NZS3101 are for the 2006 edition which includes Amendments 1 and 2.

7.3.1 Materials in topping concrete

Concrete

The minimum permitted design strength of concrete is 25MPa *(NZS3101, clause 5.2.1).*

Reinforcement

Grade E reinforcement should be used for starter bars (continuity reinforcement) connecting hollow-core units or topping concrete above hollow-core units to the supporting structure *(NZS3101, clause 13.3.7.3)*. Grade N reinforcement could be used in internal regions of floors away from supports, adjacent beams or walls or other structural elements *(NZS3101, clauses 5.3.2.3 and 5.3.2.4).* However, where this Grade of reinforcement is used the conditions given in clause.3.2.5.4 need to be satisfied and these are very restrictive. It is recommended that Grade E reinforcement is used for all reinforcement in the topping concrete.

NZS3101, clause 5.3.2.6 effectively excludes the used on welded wire mesh from use in topping concrete. Recently ductile mesh has become available. However, until it is shown that this can behave in a ductile manner this should not be used. The potential problem with

ductile mesh is that anchorage of the ductile wires relies in welding to transverse bars. When a longitudinal bar (or wire) yields high forces are induced at the weld between the longitudinal and transverse bars. Anchorage of the bar is provided by the transverse bar bearing against the concrete. As the bearing force is displaced from the centre-line of the longitudinal bar localised bending moments are induced in the longitudinal bar, as illustrated in Figure 7-2. Consequently at the critical section of the bar, which is close to the weld, sustain both an axial force and a local bending moment. This becomes the critical section and it is unlikely that yielding will be able spread appreciable along the bar. Due to the confined region of yielding the effective ductility of the mesh is likely to be limited. Before ductile mesh can be used with confidence tests are required to demonstrate the actual ductility that can be achieved is adequate and comparable to that achieved with Grade E deformed bars. The tests must reproduce the actions that arise in topping concrete on a precast floor subjected to actions representing those arising in a major earthquake.

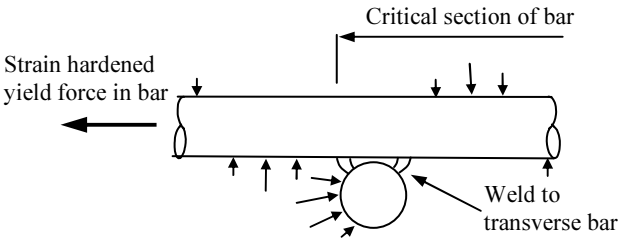

(a) Bar anchored by bearing of transverse bar against

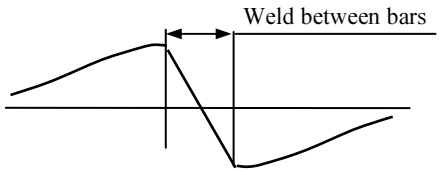

(b) Bending moments induced in bar due to bearing of transverse bar against concrete

Figure 7-2: Anchorage of mesh in topping concrete

7.3.2 Design of Reinforcement in topping concrete

Reinforcement in topping concrete may be required to;

- Resist negative moments in regions close to supports;
- Transfer diaphragm forces associated with shear transfer to the lateral force resisting elements;
- Control cracking due to shrinkage and thermal strains between precast units *(NZS3101, clause 9.3.8 and 8.8.1)*.

Spacing limits for reinforcing bars in topping concrete are given in *NZS3101 clause 9.3.8.3*. The maximum spacing for bars parallel to the span of the precast units is 400mm and for reinforcement normal to this direction it is 200mm where it crosses linking slabs between hollow-core units or between a hollow-core unit and an adjacent structural member.

The minimum quantity of starter reinforcement in concrete topping is defined in *NZS3101, clause 13.3.7.3* as that required to sustain a minimum force of 100kN per metre. This reinforcement is required to extend a minimum distance of 600mm into the concrete topping from the edge of or end of the precast units.

Negative moments may be induced into the composite hollow-core and topping concrete close to supports due to over-strength stresses induced in continuity reinforcement at the support and due to vertical ground motion, *(NZS3101, clause 19.4.3.6)*. Reinforcement is required to ensure that these bending moments do not result in a negative moment failure, see Sections

6.3.3 and 7.5. The structural standards NZS3101 and NZS1170.5 do not specify what value of structural ductility factor should be used in determining the vertical seismic actions. However, in Chapter 3 it is recommended that a structural ductility factor of 2 be used in determining these design actions, see Section 3.5.2. The distribution of bending moments and shear forces due to vertical ground motion is also given in Section 3.5.2 and described in detail in Section 6.6. Where deformed Grade E reinforcement is used the influence of tension stiffening of concrete may be ignored and the negative moment flexural strength may be conservatively assessed ignoring the prestress in the hollow-core units.

NZS3101, clause 13.3.9 requires diaphragm actions associated with shear transfer to lateral force resisting elements to be designed on the basis of a strut and tie analysis. Caution should be taken in selecting the chosen strut and tie mechanism to ensure that struts are not assumed to cross locations where wide cracks are likely to develop in an earthquake, see Section 6.10.

7.3.3 Shear strength of hollow-core floors

The design shear strength of hollow-core units can be calculated from *NZS3101: 2006,* with critical clauses occurring in Sections 19, and 9 of the standard.

Hollow-core units are generally supplied on the basis that they are required to act as simply supported units. However, as indicated in Section 6.7 continuity reinforcement and vertical seismic ground motion can result in significant negative moments acting near the support regions. Flexural cracking can significantly reduce the shear strength and the critical condition changes from web shear cracking to flexural shear cracking, see *NZS3101, clauses 19.3.11.2.2 and 19.3.11.2.3.*

The shear strength in negative moment zones is calculated from *NZS3101, clause 19.3.11.2.4 with clause 9.3.9.3.4.* It should be noted that the shear stress that can be resisted by concrete in negative moment zones depends on the shape of the cross-section and the total effective depth of the hollow-core unit with its insitu concrete topping. The shear stress that can be resisted by the concrete reduces when the depth of the hollow-core unit exceeds 300mm or with units in which the voids have sides which are parallel or close to parallel over an appreciable height. These design rules come from consideration of the shear force that can be transmitted across cracks and the locations where the shear stresses are at their maximum. In addition it should also be noted that nominal shear reinforcement is required in hollow-core floors where the shear force exceeds $V_c/2$ if the overall depth of the hollow-core unit and insitu concrete topping equals or exceeds 400mm *(NZS3101, clause 9.3.9.4.13)*.

The $V_c/2$ requirement for hollow-core units with a depth greater than 300mm in most cases requires shear reinforcement to be added in zones that may be subjected to negative moments.

Recommended detailing of hollow-core units at their supports

The commentary to *NZS3101 in clause 18.6.7* contains recommended details for hollow-core units at their supports. This involves breaking out two of the ducts at each end of the unit and adding a 16mm plain round Grade 300 bar to the bottom of each duct. The bar is anchored by standard hooks in the duct and supporting beam (or structure). The broken out ducts are then filled with concrete. This detail has major advantages over the hairpin or paper clip form of continuity bars used in the past (see Section 6.6).

7.3.4 Torsional response of hollow-core units

Design for torsion in structural concrete is contained in *NZS3101, clause 7.6 and with clause 19.3.12* for prestressed members. Little guidance is given on the effect of compatibility induced torsion on flexural and shear behaviour of hollow-core floors except in *C9.4.3.6* there is a warning of potential problems arising in hollow-core floors where appreciable compatibility torsion may be induced due to seismic actions.

The potential influence of torsion on performance of hollow-core floors is considered in Section 6.9 and designers are recommended to follow the recommendations given in that section.

7.3.5 Deformation compatibility of hollow-core floors

As discussed in, Sections 5.4.5 and 6.8 differential deflections between hollow-core units and adjacent structural elements can result in extensive cracking in the hollow-core webs. To avoid this problem *NZS3101 in clause 18.6.7.2* specifies that hollow-core units that are parallel to a beam should be linked to the beam by a slab that has a span equal to the larger of 600mm or 6 times the thickness of the slab. This linking slab reduces the force transfer between the beam and hollow-core unit to a safe level that will not damage the webs.

The same principle should be applied to other structural elements, such as walls, that may under seismic conditions develop differential vertical displacements relative to an adjacent hollow-core unit.

7.3.6 Support ledge for hollow-core units

Minimum dimension of support ledge and bearing strip

NZS3101 requires hollow-core units used in floors to be mounted on low friction bearing strips. The relevant details are given in clauses *NZS3101 clause 18.7.4*.

In designing a support ledge allowance has to be made for loss of support due to the relative movement of the precast floor units to their supporting structure. This movement can occur due to;

- Elongation in beams, which are parallel to the precast units when plastic hinges form. This elongation can push transverse beams that are supporting hollow-core units apart;
- The relative rotation of the floor and supporting structure;
- Creep, shrinkage and thermal movements in the floor and supporting structure.

Clause 18.7.4 in NZS3101 requires either that;

1. The initial overlap length between a support ledge and the hollow-core units it is supporting to be equal to or greater a distance to allow for construction tolerance plus the larger of;
    - 75mm;
    - 1/180 times the clear span of the hollow-core unit; or
2. Calculations or test results prove that the alternative details are acceptable.

The allowance for construction tolerance is required to be "*a reasonable combination of construction tolerances*". It has been suggested that taking a value equal to the square root of the different construction tolerances is a reasonable approach [1], which gives a value of 17mm.

Recent research has indicated that the elongation associated with the formation of plastic hinges in beams that are parallel to the span of precast units and have a depth greater than 1,500mm, may cause more movement of the hollow-core units on their supporting ledges than has been assumed in developing the two limits from NZS3101: 2006 given above (see Section 3.4 and Appendix A3.2). In such cases it is suggested that an additional limit is added to the two criteria given in the Standard (as outlined in 1 and 2 above). In the case where the beam depth, h_b, is between 1,500mm and 2,500mm in depth, the minimum support ledge length should be taken as the distance required for construction tolerance (17mm) plus the minimum length required for bearing, as given by *NZS3101 clause 16.3.1*, plus the larger of 75mm, or the span of precast unit divided by 180, or $0.038h_b$.

Reinforcement of support ledge

Support ledges must be reinforced to resist the bending moments and axial forces that may be transmitted to them by the hollow-core units. The reaction *"R"* can be calculated directly from the dead weight and loading applied to the precast unit. The minimum horizontal force, *"H"*, as specified in *NZS3101 clause 16.4.2,* is the calculated value but not less than *"0.2R"*. In this case a value of 0.7R should be used as the low friction bearing strips required by *NZS3101 clause 18.7.4 (c)* have a maximum coefficient of friction of 0.7. The required area of horizontal reinforcement, *"A_{sc}"*, can be calculated using the strut and tie method, as illustrated in Figure 7-3.

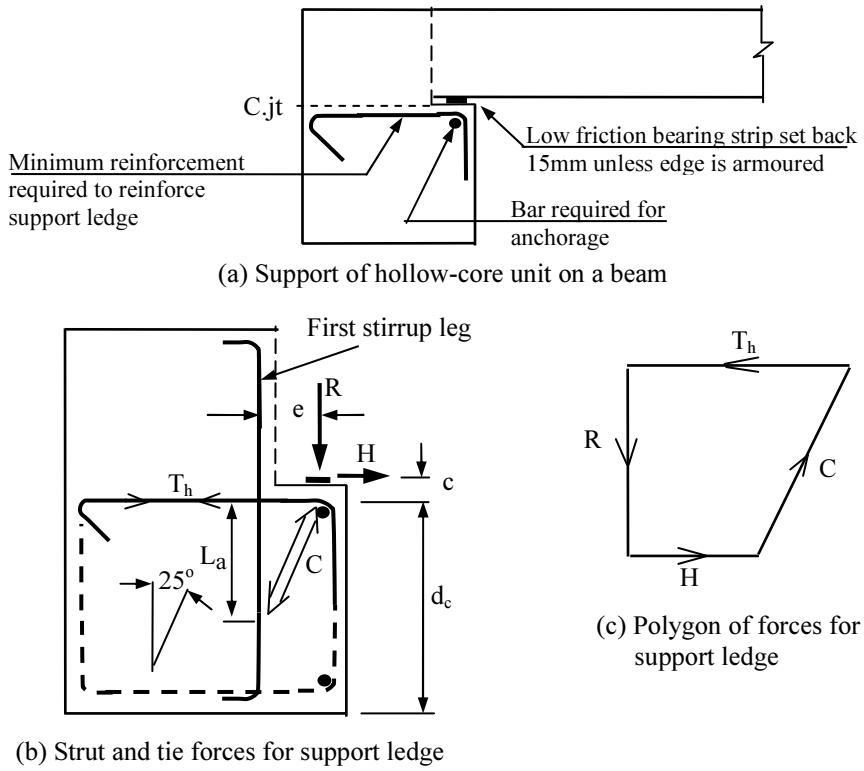

Figure 7-3: Design of support ledge for hollow-core units

The angle of the compression strut to the first stirrup leg, see Figure 7-3, should not be less than 25° *(NZS3101: 2006, clause A4.5)*. The magnitude of the internal lever-arm, *"L_a"*, should be taken as the smaller of *2.14e* or *0.9d_c,* where *"e"* is the horizontal distance between the line of the reaction *R* and d_c is the effective depth of the flexural reinforcement in the support ledge. The value of *2.14e* for the internal level arm, L_a, corresponds to the minimum permissible angle of the strut and the second value, *0.9d_c*, ensures that the strut force *"C"* remains within the section. The area of horizontal reinforcement, A_{sc}, required to resist the horizontal tension force, T_h, is given by;

$$A_{sc}\, f_{yc} = \frac{T_h}{\phi} = R\left[\frac{\left(e + 0.7\left(c + L_a\right)\right)}{\phi\, L_a}\right] \qquad \text{(Eqn. 5-1)}$$

Where c is the vertical distance between the centre of the horizontal reinforcement for the force T_h , f_{yc} is the yield stress of the reinforcement and ϕ is the strength reduction factor, which has a value of 0.75 *(NZS3101 clause 2.3.2.2)*. The area of horizontal reinforcement, $A_{sc,}$ should not be less than that required by *NZS3101 clauses 9.3.8.2.2 and 9.3.8.2.3.*

In ductile detailing zones the reinforcement should be extended to limit the possible extent of concrete spalling when a plastic hinge forms. This extension is shown as a dashed line in the figure.

7.4 Hollow-core performance in fire

7.4.1 Introduction

Appreciable research has been carried out over-seas into the performance of hollow-core floors subjected to fire and a limited amount of research on this topic in New Zealand [1, 2]. Caution is required in interpreting the results and conclusions from the over-seas research due to the differences in the way in which hollow-core units were reinforced and supported in different countries. In particular there are significant differences in what has become standard practice in New Zealand over the last few decades to what has been used in Europe. These differences received little attention in reference [1] or the resulting discussion of this paper, see reference [2].

The significant differences include;

- In New Zealand it is unusual to use top strands in the hollow-core units, while it appears that the use of top strands is common practice in Europe (see 2.4) where the depth of the units exceed 250mm;
- In New Zealand continuity reinforcement, which ties the floor to the supporting structure, is often located in the insitu concrete topping. In Europe this continuity reinforcement is located in cells, which are broken out at the ends of each member, reinforced and filled with insitu concrete. With this arrangement top continuity bars effectively lap the top strands (see Section 2.5).

On a theoretical basis these differences can make a significant difference to the performance of hollow-core floors subjected to fire conditions.

There are two principal areas of concern on the performance of hollow-core floors in fire. These are outlined below and both areas are being studied in a current (2010) PhD research project at the University of Canterbury.

7.4.2 Lateral expansion of hollow-core units under fire

Under fire conditions the concrete below the voids in hollow-core units expands relative to the higher levels in the floor. If the floor was free to distort the section of the hollow-core would distort in positive curvature. However, adjacent hollow-core units and restraint from the supports partially restrains this deformation and as a consequence flexural and shear stresses are induced in the webs (and other parts of the section), as illustrated in Figure 7-4. The concern is that the stresses in the webs might lead to extensive cracking, which could possibly endanger the stability of the floor. It would take some time for extensive web cracks to develop in a fire and hence this would not be a danger to anyone on the floor. The principal concern in this situation is the possibility that the failure of one floor by this mechanism might lead to a progressive collapse of the floors below this level.

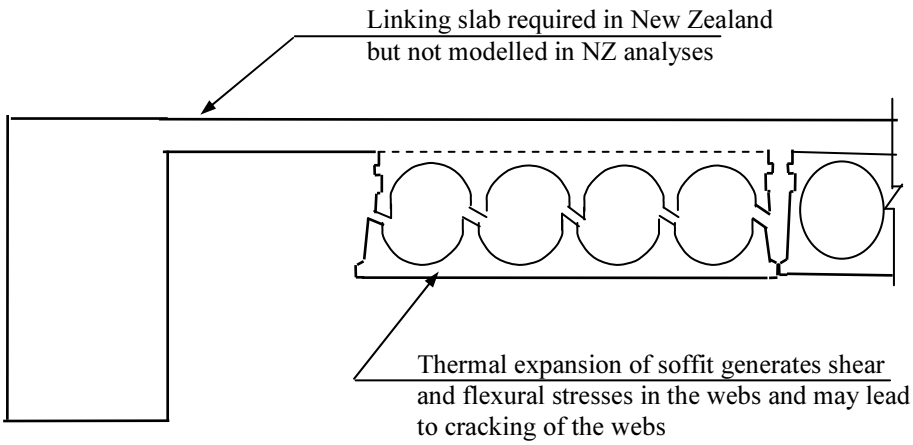

Figure 7-4: Lateral expansion of soffit of hollow-core floor under fire conditions

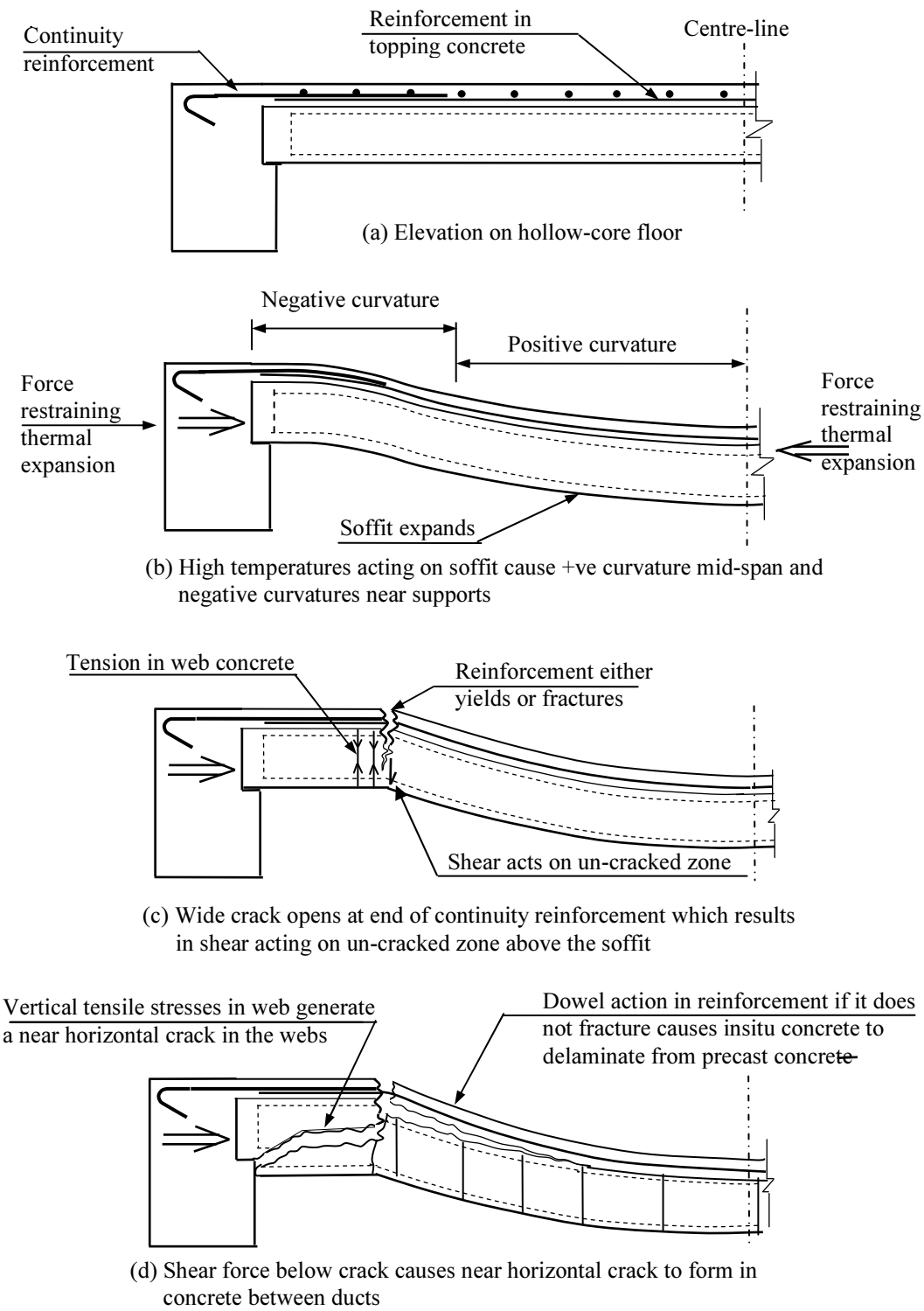

Figure 7-5: Longitudinal expansion of hollow-core unit under fire conditions

In this context it should be noted that over-seas fire tests appear to have been carried out in floors that did not have linking slabs. In such cases, where the hollow-core units are constructed against beams, lateral expansion of the soffit can be partially restrained by the beams, which would reduce or prevent the development of the web cracks. This apparently potentially advantageous effect was demonstrated by Chang et al [1] in a series of analyses. However, the detail he investigated and recommended potentially has serious adverse effects

on seismic performance and hence it is not permitted in New Zealand, as outlined in Sections 5.4.5, 6.8 and Appendix A7.3.5.

7.4 3 Longitudinal expansion of hollow-core units under fire

Under fire conditions thermal expansion of the hollow-core unit will be partially restrained by the supporting structure. The restraining compression force, see Figure 7-5, increases the flexural restraint provided by the continuity reinforcement. The high temperature in the lower regions of the hollow-core units induces positive curvatures in the mid span regions of the floor. If the floor was un-cracked it would deform as illustrated in Figure 7-5 (b). Due to continuity with the supporting structure the negative curvatures induced near the supports would be of a similar magnitude to the positive moment curvatures induced in the mid span region.

A potentially weak section occurs where continuity reinforcement is terminated, see Figure 7-5(c). Under the action of this negative curvature the section may fail and a crack open up. Due to the low reinforcement content crossing the crack it is unlikely that sufficient tension could be transmitted across the crack to induce secondary flexural cracks. Consequently the majority of the negative moment rotation would be induced at the one crack, with potentially either the reinforcement yielding extensively or the reinforcement fracturing at this section. In either event shear transfer across the crack by aggregate interlock action would be lost, which results in the shear force being applied to the un-cracked concrete zone near the soffit of the hollow-core units, see Figure 7-5 (c). The transfer of the shear force to this zone induces vertical tensile stresses in the concrete between the ducts, leading to the development of a near horizontal crack that extends and results in failure, see Figure 7-5 (d). The situation is similar to that observed in a test, see Appendix A5, where these tensile stresses due to negative moments caused a near horizontal crack to form in the hollow-core unit, which resulted in collapse (see Figure A-19).

In all probability the use of top strands in the hollow-core unit together with negative moment continuity reinforcement located in broken out cells, which effectively lapped the strands, would prevent the postulated failure mechanism. In this case the added strength of the strands would have ensured that the weak section was located at the back face of the hollow-core unit. When this section cracked the hollow-core floors would have been left acting as a simply supported member.

References

1 Chang, J., Buchanan, AH, Dhakal, RP, and Moss, P., 2008, *Fire Performance of Hollow-core Floor Systems in New Zealand*, SESOC Journal, Vol. 21, No. 1, pp5-17

2 Fenwick, R and Bull D, 2008, *Discussion of reference [1] and response from the authors,* SESOC Journal, Vol. 21, No. 2, pp12-16

Appendix A
Background Material to Performance of Hollow-core Floors

A1.0 General

This appendix gives a summary of research on the structural performance of hollow-core floors. Background information is given on the criteria that are contained in Chapter 6 for the assessment of hollow-core floors and for buildings containing these floors.

A.2 Over-strength of Plastic Hinges in Beams

The over-strength of plastic hinges in beams built compositely with precast floor components is an area of active research in 2010. Recommendations for assessing over-strength of beams may be expected to change as research progresses.

Research has shown that strength enhancement of negative moment flexural strengths, due to the presence of pretensioned units in a floor, can be considerably greater than that indicated by over-strength calculations based on editions of the Structural Concrete Standard NZS 3101 published prior to 2008 [SANZ, 2006; Fenwick et al 2005; Fenwick et al 2006; Lau 2007]. It should be noted that, as discussed later in this section, some sources of strength enhancement are not considered in current standards (2010). In carrying out an assessment for retrofit of existing buildings it is important to assess the significance of the potential increase in over-strength of beams on seismic performance. An unanticipated change in the shape of the bending moment, due to increased negative moment strength in a beam, may in the event of a major earthquake result in;

- Increased shear forces in regions not adequately reinforced for this shear force;
- Plastic deformation being induced in regions of the beam which are not detailed for ductility;
- Premature crushing of concrete due to the increased flexural compression forces sustained by a beam;
- A column sway mechanism developing instead of the ductile beam sway mechanism assumed in the design.

Figure A-1 illustrates a situation where the use of pretensioned units in a floor has been found to result in a very significant increase in the over-strength of beams in ductile moment resisting frame buildings. When a plastic hinge forms, elongation occurs. Where precast units span past plastic hinges, such as the plastic hinges marked A in Figure A-1 (c), elongation is partially restrained by the pretensioned units in the floor. A tension force, T_{slab}, which is resisted by the slab, acts with the tension force in the web and it can result in a considerable increase in the negative moment flexural strength of the plastic hinge that is adjacent to the column, see left hand side of Figure A-1 (a). In addition the increase in the resultant compression force balancing the tension forces in the web and the slab can reduce the ductility of the plastic hinge. The influence of the tension force in the slab on the positive moment strength is small, as the line of action of this force is nearly co-axial with the compression force. The area of concrete available to resist the compression force for the positive moment includes part of the slab adjacent to the beam, see Figure A-1 (b), and consequently the magnitude of the internal lever-arm for the tension force in the bottom of the beam is not significantly reduced.

The Structural Concrete Standard, NZS 3101: 2006 (see clause 9.4.1.6.2) gives details of how the flexural over-strength can be assessed when precast prestressed floor units span past an intermediate column where plastic hinges may form on both sides of the column.

Figure A-2 illustrates a second situation where precast units in a floor can increase the flexural strength. In this case the pretensioned units are supported on transverse beams, which frame into the

columns, and consequently the pretensioned units do not directly confine elongation in the plastic hinges. However, pretensioned units reinforce the floor between the transverse beams, which restricts the opening of flexural cracks that would otherwise extend from the beam into the floor.

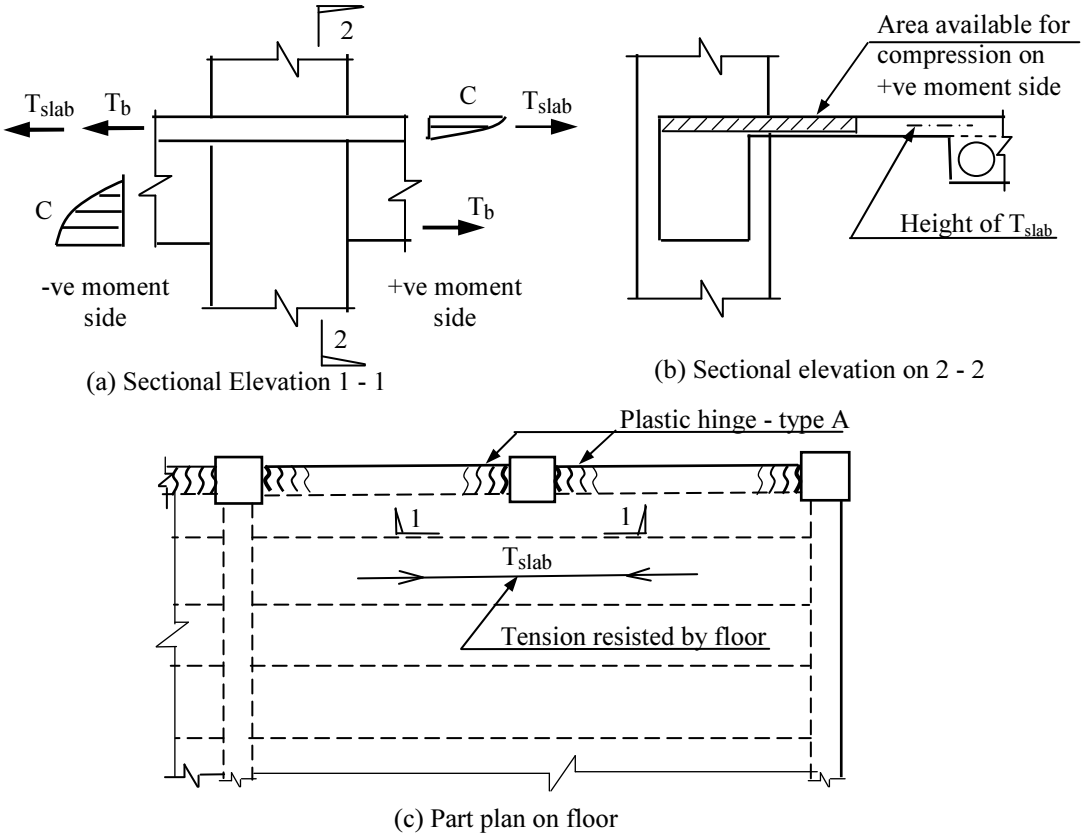

Figure A-1: Interaction of floor and beam where precast floor units span passed the beam plastic hinges

Elongation of the plastic hinges results in wide cracks opening along the interface between the transverse beams and the floor slabs, as weak sections exist at locations where the prestressed units terminate. In buildings where the seismic forces are resisted by perimeter frames considerable inelastic deformation, and hence elongation, can be expected to develop. Often the internal frames are designed to resist gravity loads and for this shallower beams with longer spans are adequate. Consequently these frames are more flexible and they resist only a small portion of the seismic forces and they do not undergo significant inelastic deformation, or sustain as much elongation as the perimeter beams. Hence wide cracks can be expected to develop along side the transverse beams adjacent to the perimeter frame but only narrow cracks near the internal frames, see Figure A-2. With this pattern of deformation the floor bays act in a similar manner to deep beams. They are pushed apart at the perimeter frames, as illustrated in Figure A-2, with bending moments and shear forces being induced in the plane of the floor slab in each bay. In a perimeter frame with multiple bays, as shown Figure A-2 (b), the restraining force from this deep beam type action may build up due to the multiple bays.

In a floor, which contains pretensioned units that are supported on a transverse beam close to a plastic hinge, the tension force resisted by the slab, T_{slab}, is made up of two components. The first of these is the tension force transmitted by reinforcement across the crack that forms at the interface between the transverse beam and floor slab, and the second is the clamping force resisted by the deep beam type action of the bays in the floor slab. Tests have shown that this deep beam type action can in some situations increase the strength to a considerably extent [Lau, 2007; Peng, 2009]. At present there is no published method of assessing the potential strength increase due to deep beam type action of floor

slabs containing precast prestressed units and no allowance for this action is included in the Structural Concrete Standard, NZS 3101: 2006 [SANZ, 2006].

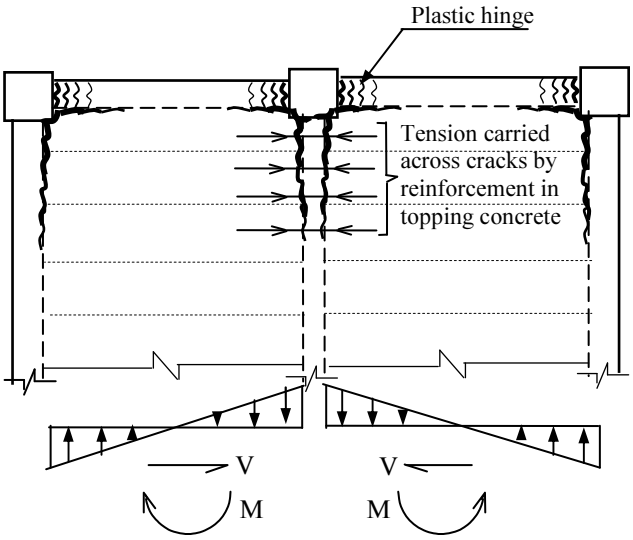

(a) Deep beam action in frame with 2 bays

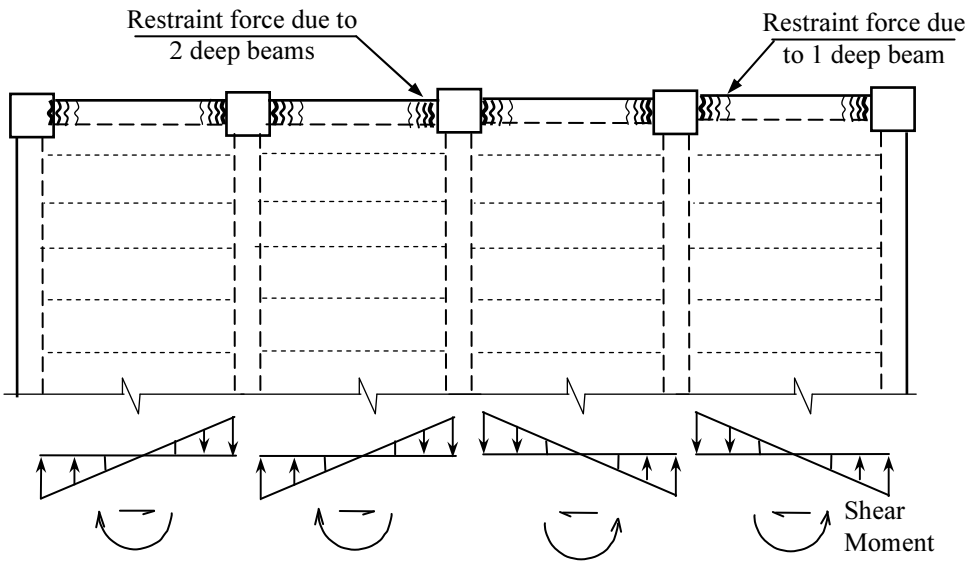

(b) Deep beam action in frame with multiple bays

Figure A-2: Deep beam action in floor slabs

The magnitude of the tension force resisted by a floor increases with the magnitude of elongation sustained in the plastic hinges. The theoretical flexural strength of a section, based on the measured properties of materials, is typically sustained at a section ductility of the order of 3 to 5. At this level of inelastic deformation typically only the reinforcement within a distance of about beam depth on each side of the web contributes to strength. The peak flexural strength is sustained at a section ductility of an order of magnitude greater than that corresponding to the theoretical strength. With the higher magnitude of inelastic deformation a greater width of floor slab contributes to the flexural strength [Qi and Panatazopoulou, 1991; Fenwick et al, 1995]. For this reason the Concrete Structures Standard, NZS 3101-2006, requires different sections to be used for calculating the design strength (ϕM_n) and over-strength values (M_o). The maximum flexural strength (corresponding approximately to over-strength) is sustained in a plastic hinge when the section curvature (material strain) is

approximately 1.5 times the design limit for the ultimate limit state given in NZS 3101: 2006, clause 2.6.1.

Bending moments induced in a column are generally calculated from the flexural over-strength of the beams framing into the column. However, as illustrated in Figure A-3, there are some situations where additional bending moments may be induced in columns due to torsion acting in transverse beams. This is only likely to be significant in one-way frames where lateral forces normal to the plane of the frame are resisted by stiff elements such as walls. Torsion in transverse beams may arise due to resistance provided by a floor slab to rotation and/or due to different support conditions at the two ends of the transverse beam. The formation of a plastic hinge in a beam greatly reduces both its torsional strength and its stiffness. Hence a torsional moment contribution to column bending moments can be neglected in two-way frames, where plastic hinges may be expected to form in both the main and the transverse beams.

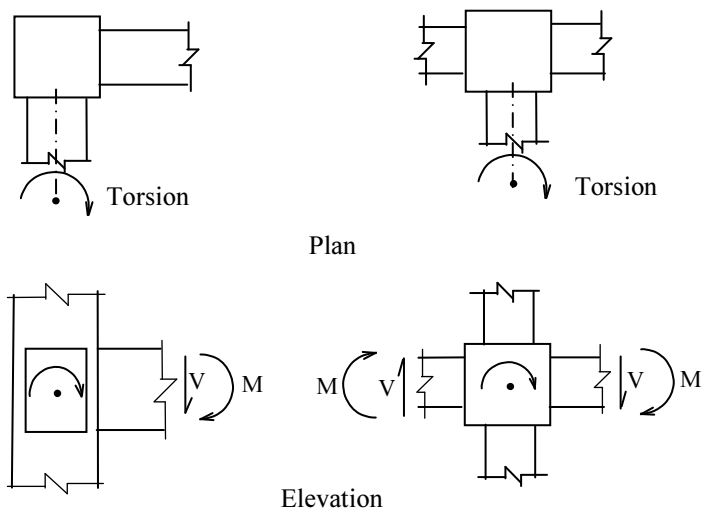

Figure A-3: Contribution of torsion to column moments in columns in one-way frames

The torsional strength of a transverse beam is difficult to assess. Design criteria for torsion indicate that the strength, after torsional cracking has occurred, depends on the proportions of transverse and longitudinal reinforcement in the beam (NZS 3101: 2006, clauses 7.6.1 and 7.6.2). However, these criteria have been developed from tests on statically determinate members, which are free to elongate when diagonal torsional cracks develop. In practice beams are in highly indeterminate structures, in which any elongation associated with the development of torsional cracking is likely to be partially restrained by the surrounding structure. This restraint can increase the torsional strength. As a tentative recommendation for over-strength calculations it is suggested that in situations where lateral displacement can induce torsion in a beam the torsional resistance of a transverse beam framing into a column in a one-way frame is assessed as 1.5 times the torsional moment calculated from NZS3101: 2006.

A.3 Loss of Support

A3.1 General

As a building sways backwards and forwards in an earthquake the beams supporting precast units rotate relative to the floors. The restraint that precast units provide to this rotation is largely determined by the reinforcement details connecting the floor to the supporting beams. When beams that are parallel to the precast units form plastic hinges they elongate and push the transverse beams apart, and this results in any floor that these beams are supporting being subjected to tension. Weak sections in the floor exist at the back face of the prestressed units or in the unit close to the support, see Figure A-4. Where the critical section is at the back face of the precast units loss of support may arise

if the support ledge is inadequately reinforced or if there is an inadequate length of the supporting ledge. This form of failure is described in Section A3.2. If the critical section is close to the front face of the support collapse can occur due to positive moment failure, which is described in Section A4.

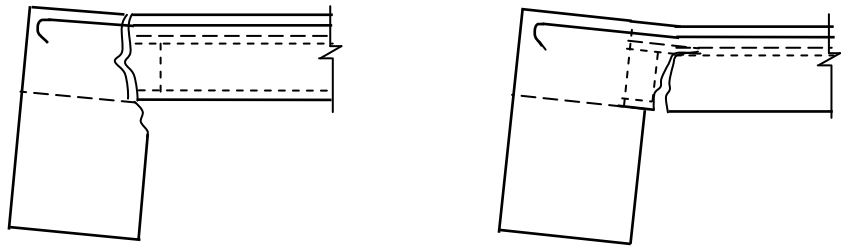

(a) Loss of support with critical section at back face of precast unit

(b) Positive moment flexural failure with critical section near front face of support (see Section A4)

Figure A-4: Loss of support and positive moment flexural failure

A3.2 Loss of support, critical section at back face of precast units

This form of failure may occur due to either;

- The supporting ledge having an inadequate length to accommodate the relative movement between the hollow-core units and the supporting ledge, see Section A 3.2.1;
- Failure of the support ledge occurs due to structural actions in the supporting beam. This failure mechanism is described in Section A3.2.2;
- Failure of tensile membrane action of reinforcement in the insitu concrete topping, see Section A3.2.3.

A3.2.1 Loss of support due to inadequate length of support ledge

The Structural Concrete Standard, NZS 3101:2006, specifies a minimum width of seating for precast units, which after allowance has been made for construction tolerances equals or exceeds the greater of 75mm or Span/180. In addition all hollow-core units are required to be supported on low friction bearing strips. These requirements are intended to provide a high level of safety against loss of support for the ultimate limit state earthquake actions and a margin of safety against collapse in a maximum creditable earthquake (MCE) with a return period of 2,500 years. Previous design standards had lesser requirements as the significance of elongation and rotation of supports had not been fully appreciated.

In carrying out an assessment of the seismic performance of support ledges, which do not meet the requirements of NZS 3101: 2006, it is necessary to work back, as illustrated in Section 6.4, to assess the magnitude of design earthquake that a ledge can sustain without the appropriate criterion given in Section 6.4.2 being exceeded. It should be noted that this criterion does not correspond to collapse. It is based on test results where the hollow-core units were observed to drop by approximately 10mm relative to the support ledge, generally as a result of spalling and local crushing of concrete. Spalling from the front of the ledge displaces a triangular portion of concrete, and consequently the hollow-core unit drops a short distance before it wedges in place, with complete collapse occurring at a higher displacement [Jensen, 2007; Jensen et al, 2007]. The assessment criterion corresponds to an ultimate limit state condition. The calculated displacements are increased by multiplying by the deformation factor, ϕ_{df} , (1.25), to allow for inherent scatter in measured and predicted values in much the same way that strength reduction factors are used in design to allow for construction tolerances and variation of material properties. In addition in calculating the bearing area required to resist the reaction between a hollow-core unit and its support ledge the strength reduction factor from NZS 3101: 2006 (0.65) is used with the local bearing stress. With these factors it is believed that satisfying

the assessment criterion also satisfies the collapse condition at a storey drift ratio of 1.5 times the calculated drift corresponding to the collapse limit state.

In assessing the adequacy of a support ledge for precast floor units allowance need to be made for;

- Construction tolerances;
- Spalling of concrete from the back face of hollow-core units and front face of support ledge;
- Creep, shrinkage and thermal movement of a floor relative to its supporting structure;
- Movement of precast unit due to elongation of beams that are parallel to the span direction of the precast units and to rotation of supporting beams;
- Length of support required to prevent failure of support ledge due to crushing of concrete.

Construction tolerance

Beams supporting precast floor units are usually cast up to level of the support ledge, with shear reinforcement projecting out of the concrete. Placing of the precast units can be difficult if some of the stirrups were bent or out of position. To reduce construction problems on site precast units are generally made on the short side. Calculation of construction tolerance would generally give a value of the order of ±17mm. Slightly greater values would be obtained if allowance was made for creep and shrinkage and thermal contraction of units by the time they were in position and the insitu concrete topping has been cast. Ideally in an assessment of a hollow-core floor the length of contact between a support ledge and hollow-core unit should be measured.

Construction tolerances are given in NZS 3109 for out of position, cross-sectional dimensions, straightness of or member beam, length and squareness of precast unit. When these values are added sum is 36 mm. A more realistic alternative is the square root of the sum of the squares, ($\sqrt{[\sum x_i^2]}$), [NZCS & NZSEE study group, 1999], which gives a value of **17 mm**. It is suggested where the construction tolerance cannot be measured a value of 20mm be assumed.

Spalling of concrete

A number of tests have been made where 300 mm hollow-core units with 75mm insitu concrete topping were supported on a concrete block, representing a support beam, giving a concrete to concrete contact surface. The units were displaced up and down to induce relative rotation at the supports and at the same time they were pulled across the ledge to represent the action induced by elongation of beams spanning parallel to the precast units. The concrete support block was held rigidly to the strong floor. The details of the tests are given in reference [Jensen, 2007]. During the tests concrete was observed to spall from the front face of support ledge in a similar manner to that observed in previous tests [Bull and Matthews, 2003]. At the end of the tests it was found that appreciable spalling had also occurred at the back face of the precast units, see Figure A-5.

a) Collapse of HC3 at -2.0% drift b) Underside of HC3 test specimen c) HC3 seating beam post test

Figure A-5: Spalling of support ledge and at back face of hollow-core units observed in Jensen tests

As illustrated in Figure A-6, relative rotation of a precast unit and supporting beam causes relative vertical movement to develop across the crack at the back face of the precast unit, which generates

shear transfer across the crack by aggregate interlock and dowel action of the reinforcement. This action may cause spalling of concrete on the back face of the hollow-core unit and as it increases the reaction on the support ledge it can also lead to spalling on the front face of the ledge. The magnitude of the shear force transfer across the crack depends on the crack width. If an appreciable width of crack exists due to creep and shrinkage movements in the floor the shear force is reduced.

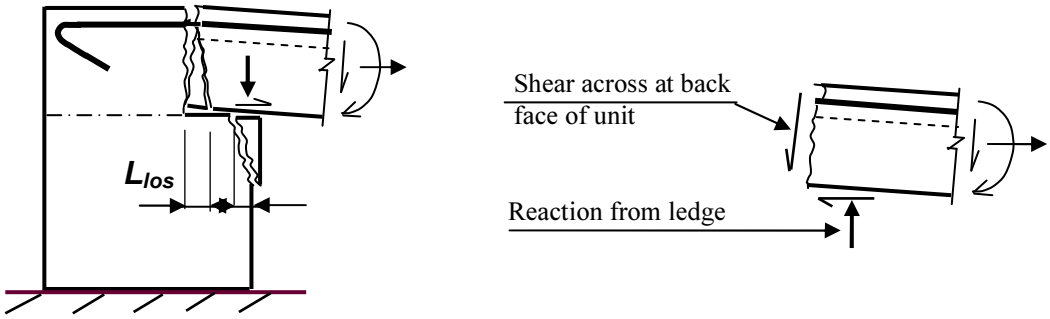

(a) Spalling of concrete from front face of ledge and back face of hollow-core unit

(b) Prying action of hollow-core on support ledge

Figure A-6: Spalling at support of hollow-core unit

Three tests were made with different initial lengths of contact between the hollow-core unit and the support ledge [Jensen, 2007]. The units were mounted directly on the ledge and the concrete above this level was cast together with the insitu topping on the hollow-core units. From the test results the displacement off each hollow-core unit across the support ledge was calculated at the stage when the unit was observed to drop 10mm. The loss in support length due to spalling of concrete was taken as the initial contact length minus the sum of the contact length between the support and hollow-core unit and support ledge required to sustain the reaction and the relative lateral displacement of the hollow-core unit to the and support ledge. The length required to resist the reaction was calculated using the nominal bearing stress given in NZS 3101: 2006. The results of these tests are summarised in Table A-1.

As a result of these tests, which are very limited in number, it is proposed that the loss in support length due to spalling, L_{loss}, be taken as;

$$L_{loss} = 0.5\, L_{contact} \leq 35mm \qquad \text{(Eq. A1)}$$

Where $L_{contact}$ is the initial contact length between the ledge and hollow core unit after allowance for construction tolerance has been deducted. Clearly with only 3 tests results the inherent scatter in spalling lengths cannot be determined, but at this stage this is the only relevant available information.

Table A-1: Test results on spalling of concrete at a support ledge

Unit	Initial seat length (mm)	Displacement at failure (mm)	Length for bearing (mm)	Loss in length due to spalling (mm)
HCL-1	35	20	3.6	11.4
HCL-2	75	40	3.3	31.7
HCL-3	50	20	2.6	27.4

Lindsay et al [2004] and MacPherson et al [2005] reported that the presence of a low friction bearing strip on the supporting ledge significantly reduced damage to the edge of the seating and to the soffit of the hollow-core units. Where this detail is used it is suggested that the loss in length, L_{loss}, is taken as 75% of the value given by Equation A-1.

Creep, shrinkage and thermal movements

The extent shortening a precast unit after it has been placed in position depends on its age, the level of prestress and the temperature when it was erected. Additional shortening is likely to occur due to shrinkage of the topping concrete. There are a number of variables that cannot be readily controlled on construction sites, which can make a significant difference to the creep, shrinkage and thermal shortening of the units after they have been erected. These variables include the temperature and drying characteristics of the environment (associated with humidity and wind speed). Calculations indicate that an allowance of 0.6mm of shortening per metre of length of a precast unit is of the right order. It should be noted that movement due to creep, shrinkage and thermal strains may occur at one or both supports. If a crack forms at one end this creates a weak section and it is possible for all the shortening to accumulate at that end. Whether the displacement accumulates at one end or not depends on the restraint provided by adjacent structural elements. Hence in assessing support ledges, where creep and shrinkage movement cannot be directly measured, one should consider two cases, namely all or none of the potential shortening occurs at the end being considered.

As noted in the previous sub-section opening up of a crack at the back face of a hollow-core unit reduces the magnitude of the shear force which may be transferred across the crack. This in turn reduces the magnitude of any potential spalling of concrete. For that reason the movement due to creep, shrinkage and thermal strains should not be added to the length lost due to spalling, but the greater of the two lengths should be used in calculations.

Elongation of beams and rotation of supporting beam

A method of assessing the relative displacement that may arise between a hollow-core unit and a supporting ledge due to elongation of beams and rotation of supporting structure is set out in Section 6.4.2. It should be noted that the elongation was assessed from beam tests, in which increasing displacement cycles were applied in the test. Each inelastic cycle that is sustained increases elongation in a plastic hinge, hence the values predicted from these test results are likely to be on the high side for the case where the peak displacement occurs near the start of the strong ground motion. In considering the influence of elongation on support of hollow-core units two cases should be considered;

1. Elongation as given from the test results in Section 3.4;
2. Elongation associated directly with the relative rotation, θ, between the hollow-core unit and the supporting ledge, that is elongation equals $0.5\theta(d-d')$.

Length of support required to prevent crushing of concrete

The concrete strength of the hollow-core unit is generally considerably greater than that of the concrete in the ledge. Hence it is the concrete strength of the ledge that is used to determine the bearing length required to sustain the reaction between the two.

A3.2.2 Loss of support due to spalling associated with actions in the supporting beam

Where hollow-core units are supported on cover concrete, as show in Figure A-7 (a), as distinct from the support ledge being reinforced, as illustrated in Figure A-7 (b), premature loss of support may occur due to;

- *Spalling in a plastic hinge associated with crushing of concrete in the compression zone and high strains in shear reinforcement;*
- *Spalling of concrete associated with bond cracks from longitudinal reinforcement in the support beam;*
- Prying action of hollow-core unit on a support ledge.

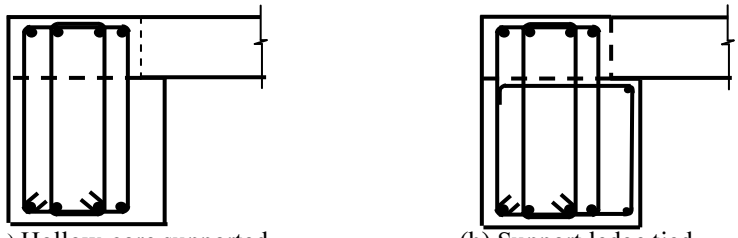

(a) Hollow-core supported on cover concrete

(b) Support ledge tied into beam

Figure A-7: Support on cover concrete or on reinforced ledge

Figure A-8 shows an example where partial loss of support has occurred to a hollow-core unit due to spalling of cover concrete at a well developed plastic hinge. Crushing of concrete in the compression zone and high tensile strains in the relatively closely spaced stirrups created a weak plane between the cover concrete and the confined core of the beam. This spalling occurred in the zone of the plastic hinge where the highest strains are induced in the stirrups. The increase in depth (associated with high stirrup strains) and the curvature of the beam appears to have concentrated the reaction between the beam and hollow-core unit to the ledge immediately above the spalled zone.

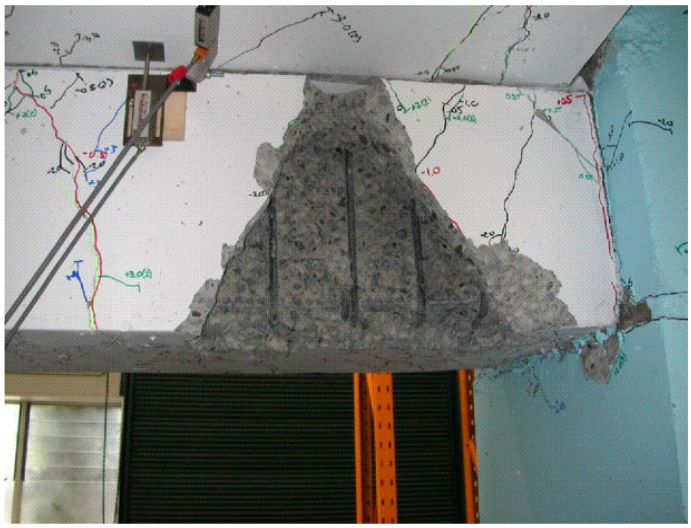

Figure A-8: Spalling of support ledge in cover concrete in a plastic hinge (Lindsay, 2004)

At a flexural crack in a beam the reinforcement carries nearly all of the flexural tension force. Away from the crack some of this tension is transferred to the concrete. Figure A-9 illustrates how this force transfer occurs. For the reinforcement to span a crack the bar has to be displaced through the concrete, which results in high bearing stresses developing against the deformations on the reinforcement. Radial compression forces are induced and micro-cracks develop form from the deformations [Goto, 1971]. The radial compression is resisted by hoop tensile stresses in the concrete, which can cause the cracking shown in Figure A-9 (b) to develop. The extent of this bond cracking is a function of the relative displacement of the bar through the concrete and the size of the bar relative to the cover concrete.

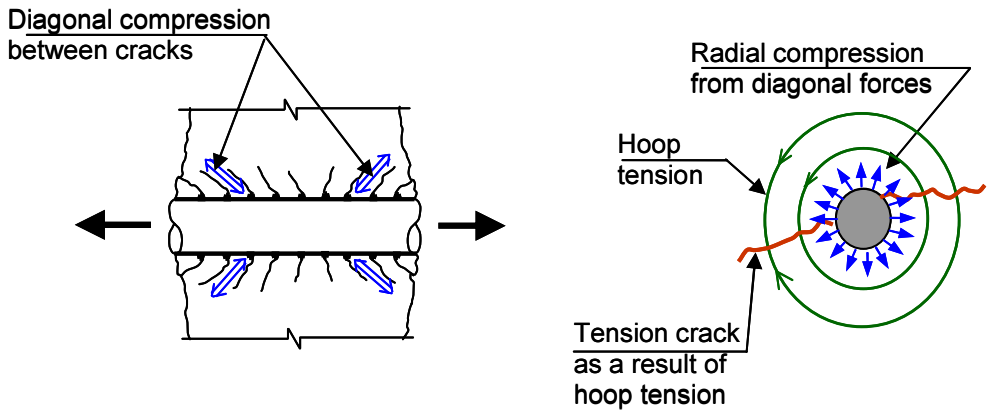

(a) Tension applied to a reinforced concrete prism

(b) Bond crack forms due to hoop tension

Figure A-9: Bond stresses and bond cracks in reinforced concrete

Figure A-10 (a) illustrates how bond cracks forming from flexural tension reinforcement in a beam may weaken a support ledge in cover concrete. Part (b) of this figure shows bond cracking observed in a test of a prism of reinforced concrete subjected to axial tension. In these tests the bars were not taken into the yield range. However, when the yield range is entered the relative displacement of the reinforcement through the concrete greatly increases and this should be accompanied by significantly increased bond cracking. It may also be noted that bond cracking between longitudinal bars can have a major influence as to when spalling is initiated in a plastic hinge.

Additional research is required to assess the potential contribution of bond cracking to failure of a support ledge in un-reinforced concrete. Clearly bond cracks can develop at stress levels significantly below yield stress and clearly the proximity of longitudinal bars to a support ledge is an important factor. To protect against possible premature failure of a support ledge due to bond cracking, such ledges should be retrofitted to tie them into the confined concrete core in regions where either;

- The ledge is located in a potential ductile detailing length, or
- A longitudinal reinforcing bar is stressed to 250MPa or more in a seismic load case and it is located within a distance of 6 times the bar diameter from a support ledge.

With new construction all support ledges should be adequately reinforced to tie them into the confined core of the beam.

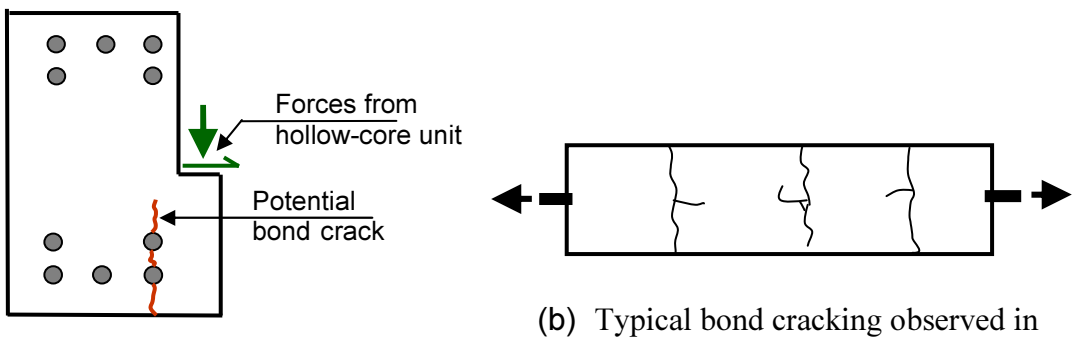

(a) Potential bond crack may reduce strength of critical section

(b) Typical bond cracking observed in axial tension test at about 200MPa [Goto, 1971]

Figure A-10: Bond cracking

As illustrated in Figure A-11, the relative rotation of hollow-core unit and its supporting element can generate prying forces on its support ledge. If the support beam is deformed in flexure and shear the reaction form the hollow-core unit may be concentrated in one or two positions along the length of the unit. The tensile stresses, which may contribute to spalling of the support ledge increase with;

- a reduction in the width of the ledge,
- an increase in the reaction, and
- a reduction in the concrete strength in the support ledge.

Closely spaced highly strained stirrups may also combine with the prying stresses to reduce resistance to spalling by creating a weak plane between the confined core of the beam and the cover concrete.

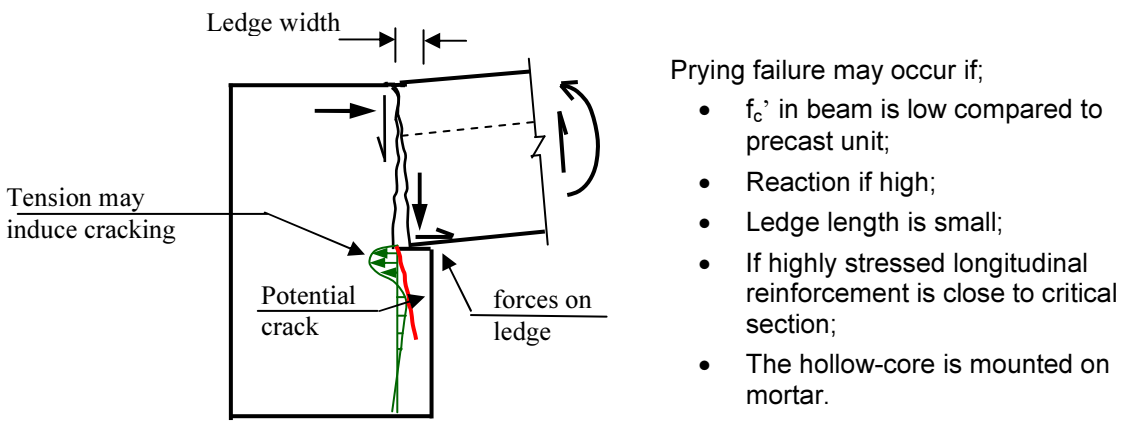

Figure A-11: Prying stresses at a support ledge.

A3.2.3 Tensile membrane action of reinforcement in topping concrete

Tests have shown that cast insitu concrete slabs supported on continuous supports can be prevented from collapsing by tensile membrane action of reinforcement. However, it has been found that with slabs supported by columns tensile membrane action can only be counted on for bars located in the bottom of the slab. Top reinforcement is pulled out of the slab and only bottom reinforcement acts to prevent complete collapse. Tests have shown that bottom bars can develop a kink to an angle to about 30° across the crack to prevent collapse after punching shear failure had occurred [Hawkins and Mitchell, 1979]. This concept has been recommended for the design of continuity reinforcement placed in the broken out cells at the supports of hollow-core units [NZCS and NZSEE study group, 1991].

When a support reaction is transferred to the insitu concrete topping on hollow-core units it has been found that the topping concrete separates from the precast hollow-core unit. Consequently tensile membrane action cannot be relied on to prevent collapse. Figure A-12 shows a hollow-core unit with 75mm of topping just prior to collapse. It can be seen that the insitu concrete has delaminated from the precast concrete. While tests have shown sufficient bond can be developed to enable hollow-core units and insutu concrete topping to act as a composite unit in flexure the same is not true when direct tension is applied to the insitu concrete through continuity reinforcement in the topping concrete.

During tests on hollow-core floors it has been found that appreciable delamination develops between the insitu topping concrete and supporting beams when the floor is subjected to inelastic deformation. Figure A-13 shows the extent of the delamination observed in two floor tests.

Bond between two concretes depends on the level of carbonation of the interface. Where the concrete has been wet and/or exposed to the air for an appreciable period of time carbonation of the precast concrete occurs, which reduces the strength of the interface [Forrest, 2008].

Figure A-12: Separation of insitu concrete topping and hollow-core unit when support reaction is transferred to topping concrete.

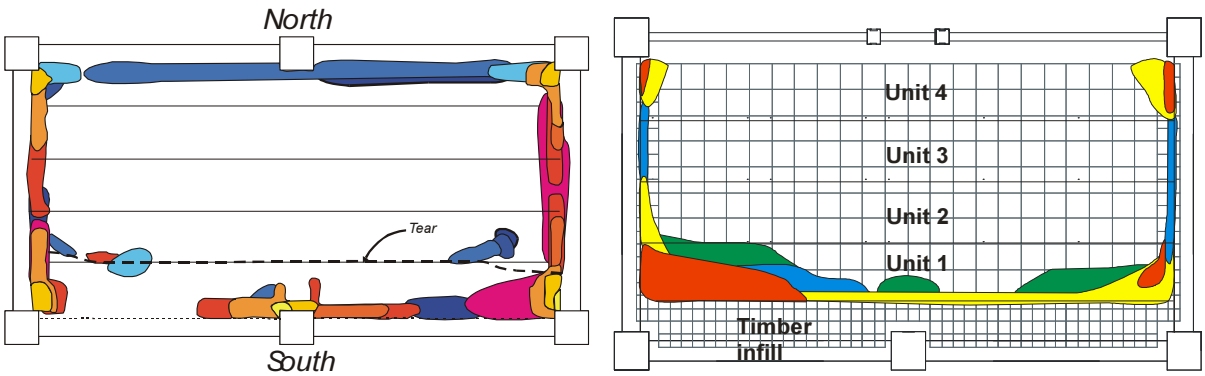

(a) Delamination map after completion of the +2.0% and -2.5% drift cycles [Matthews 2004]

(b) Delamination map after completion of the +2.0% and -2.0% drift cycles [MacPherson, 2005]

Figure A-13: Delamination of insitu concrete topping measured in two tests of frame floor slab sub-assemblies

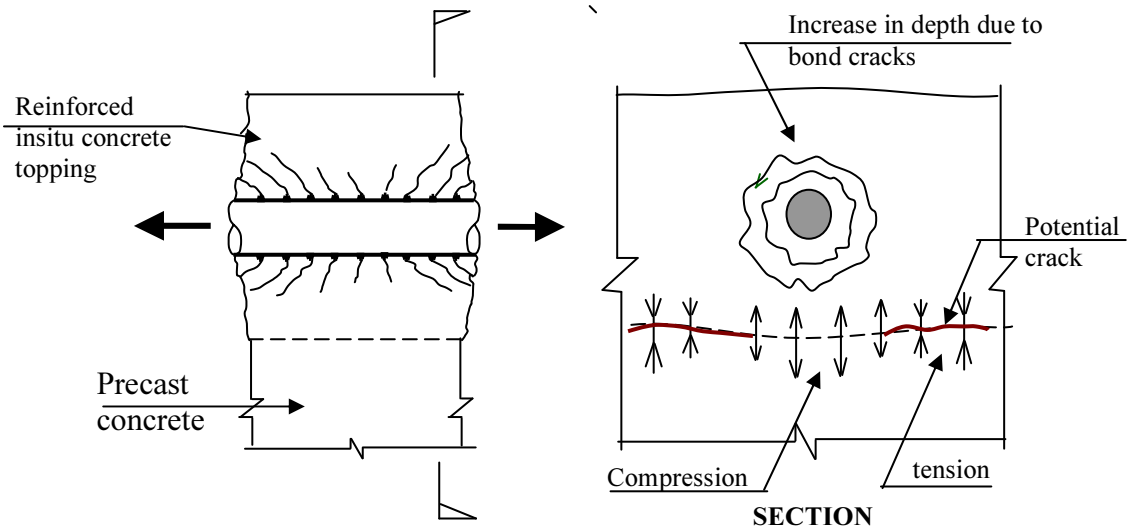

(a) Bond cracks in concrete topping

(b) Tension and compression across interface of insitu and precast concrete

Figure A-14: Delamination of insitu concrete and precast concrete and bond cracks

Another potential source of delimitation arises from the development of micro bond cracks associated with reinforcement in the topping concrete. The opening up of these cracks creates a small local increase in the depth of the concrete. This induces local compression at the interface between the concretes immediately under the bar and tension across the interface on each side of the bar, as illustrated in Figure A-14. As the bars may be highly stressed bond transfer to the concrete generates high local shear stresses between the insitu and precast concretes immediately under the bar. The combination of shear stress and tension could contribute or cause delamination.

A3.2.4 Loss of support to a web

A hollow-core unit may be cut to avoid a clash of the unit and other structural elements such as a column, or to provide access for services, see Figure A-15. While such actions should not be carried out without the knowledge of precaster, structural engineer and main contractor, this cannot be guaranteed in all cases. Often holes are cut after the building has been occupied.

Loss of support to a web in a hollow-core unit may also arise due to;

- the supporting beam being subjected to curvatures of sufficient magnitude to cause one or more of the webs to lift off the support ledge, or
- spalling of concrete in a plastic hinge region below one or more webs in the unit.

These two cases are not critical provided the ends of the hollow-core unit have been filled with concrete to provide a diaphragm at the end of the unit. This diaphragm enables the shear force carried by an unsupported web to be distributed along the support ledge. Where such a diaphragm is not present the structural actions need to be assessed and where necessary a retrofit provided to carry the reaction from the web to the support.

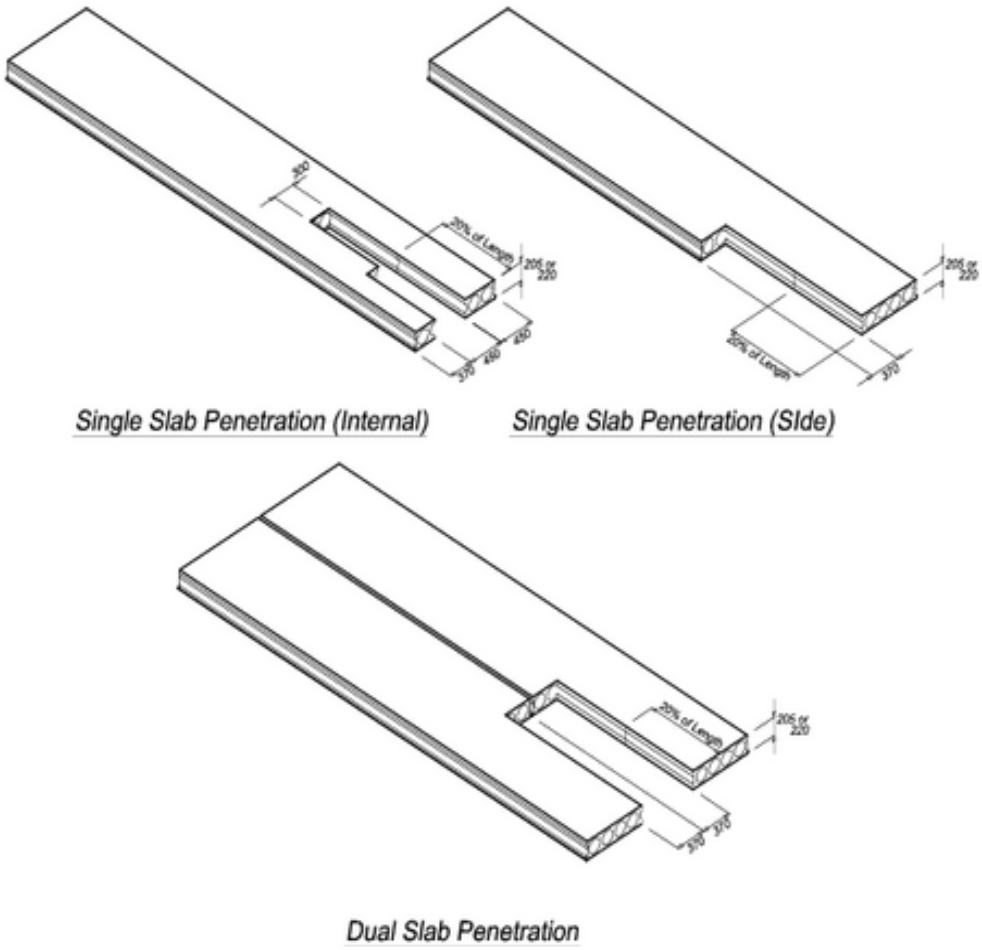

Figure A-15: Examples of "cut-outs" in hollow-core units (Source: Firth Industries.)

Simplistically, it can be assumed that for every web or group of strands cut that the flexural capacity of the floor is reduced in portion to the number of strands cut. The influence on shear is more difficult to assess, as is illustrated in Figure A-16 and discussed below. Where modification to a hollow-core unit is proposed in design, or found in assessment for retrofit, advice from the precast manufacturer should be sought.

Figure A-16 shows a web of a hollow-core unit that does not extend to the support. Positive moments acting on the unit cause the line of action of the compression force, C, to follow the inclined trajectory shown in the figure, with the shear force being resisted by the vertical component of the compression force. The prestress force in the development length of the strands balances the longitudinal component of the compression force, C. This leaves the shear force to be carried by the vertical component of tension stresses in the web. Above the web this tension force is resisted by shear in the concrete, which in turn is balanced by compression forces in the adjacent webs. If the tension force in the web is of sufficient magnitude the web will split. Tensile stresses induced by this action are increased by tensile stresses associated with anchorage of the pretension strands [Fenwick et al, 2004]. If these stresses reach a critical magnitude a horizontal crack can form. The resultant crack in a web may run for an appreciable distance along the precast unit until the resultant shear force resisted by the web can be transmitted to the adjacent webs by the strength of the precast and insitu concretes above the cores in the hollow-core unit.

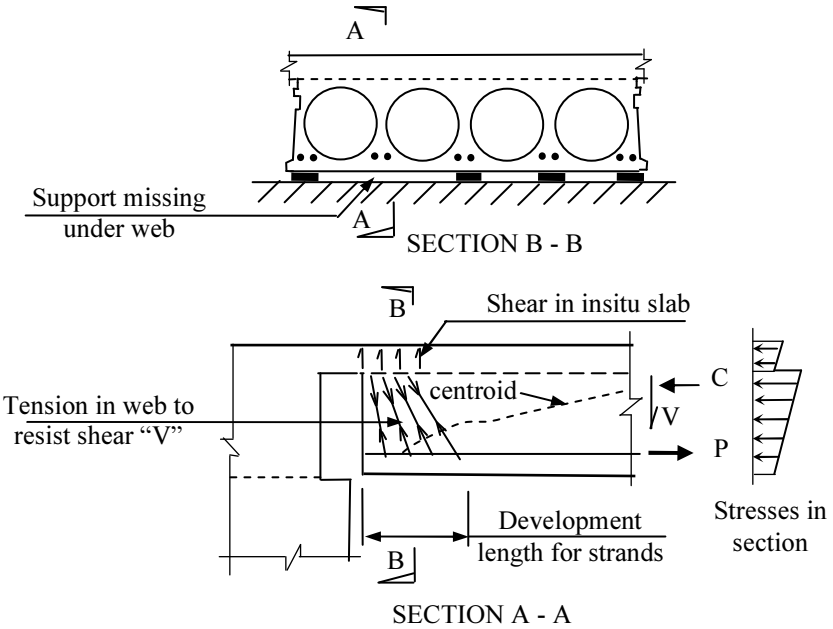

Figure A-16: Tension induced in a web due to loss of support

A.4 Positive moment failure

Positive moment failure of hollow-core units close to a support was observed in the Matthews' sub-assembly test of a frame and floor and in tests of single hollow-core units mounted on a rigid concrete blocks [Matthews, 2004; Bull and Matthews, 2003]. In both cases positive moment cracks developed at drift ratios within the elastic range. With the sub-assembly test the positive moment crack was observed at a drift ratio of 0.0025, with collapse occurring at a drift of 0.025. However, in the latter stages of the test the hollow-core units were only supported by dowel action of the strands and if vertical seismic excitation had been present it is anticipated that collapse would have occurred at an earlier stage. With the Bull and Matthews tests the positive moment crack was observed at a drift ratio of 0.005.

Once a positive moment crack has formed adjacent to the support, a weak section is created and any movement of the support, due to beam elongation or any other cause, results in opening up of the crack. Generally if a positive moment crack forms in the hollow-core unit, rather than at the back face

of the unit, it is located at the face of the internal dam in the hollow-core cores, see section 1 in Figure A-17 (a). At this location, which is generally of the order of 75mm from the end of the unit, the prestressed strands are ineffective. The flexural strength depends on the tensile strength of concrete. The strands are ineffective for two reasons. Firstly the section is located within 12.5% of the start of the transfer length and transfer by bond is relatively inefficient for the first few strand diameters. Secondly the pretension strands are located below the webs, which in 300mm deep hollow-core Stresscrete units are approximately 300 mm apart, see Figure A-17 (b). For any compression stress to migrate from the strands to the concrete in the soffit under the cores a distance of the order of 120mm is required (based on 45° dispersion). Hence the concrete in the soffit mid-way between the strands is not effectively stressed by the minimal prestress transfer that has taken place in the first 75mm of the transfer length. If tensile cracking is initiated in the concrete below the cores the loss in tension force is redistributed to the concrete below the webs. This action over-stresses the remaining tensile concrete zone and bond failure occurs with the strands slipping through the concrete between the crack and the end of the unit.

There are three factors which can indicate the potential for positive moment flexural cracks to form near the face of a supporting beam in an earthquake. The critical section is section 1, as shown in Figure A-17 (a). These three factors are outlined below.

1. The opening up of a wide crack at the back face of the hollow-core unit, section 2 in Figure A-17 (a), indicates that slippage has occurred between the unit and the support. This indicates that either any bond between the precast unit, mortar pad and concrete in the supporting ledge has been broken, or the frictional resistance has been over-come. In either case the loss of shear transfer between the ledge and precast unit indicates that a positive moment crack will not develop at the critical section (section 1). Cracks often develop at the back face of the unit due to shrinkage and creep of the hollow-core and insitu concrete topping, and/or due to differential thermal stresses between the main beams and floor. However, a narrow crack at the back face of the hollow-core unit does not exclude the possibility of a positive moment failure of the hollow-core unit. Narrow cracks did form in the Matthews' floor test [Matthews 2004], but failure still occurred due to positive moment flexural cracking near the face of the support. It is assumed a significant crack with width of 0.5mm or more indicates that the unit is sliding on the support and that a positive moment crack will not form at the critical location (section 1).

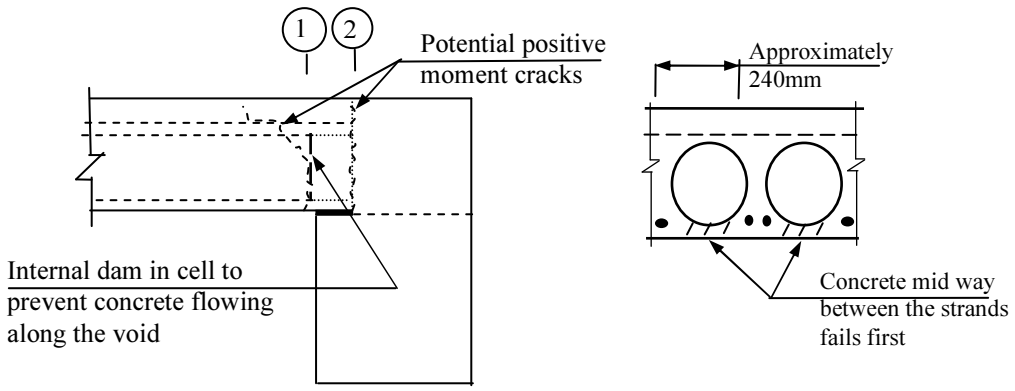

(a) Location of potential positive moment flexural cracks

(b) Tensile failure of concrete mid way between strands

Figure A-17: Positive moment cracking close to support

2. The use of a mortar pad between hollow-core units and their support beams increases the shear force that can be applied to the soffit of a hollow-core unit. This increases the magnitude of positive moment which may induced at the critical section at the face of the internal dams in the hollow-core units. In both cases where positive moment failures have been observed the hollow-core units were supported on mortar.

3. The higher the strength of the insitu concrete the greater the potential for a positive moment flexural crack to form at the critical section in a major earthquake.

Figure A-18 shows the development of a positive moment flexural crack in a hollow-core unit close to its support. The prestress force in the strands develops over a distance of approximately 50 strand diameters. The longitudinal component of the prestress force is balanced by the longitudinal component of the compression in the concrete. For equilibrium the vertical component of the compression force in the positive moment zone is equal to the shear force. When the width of this crack is small the majority of the shear force is transmitted across the crack by aggregate interlock action, see Figure 18 (b). However, with the opening up of the crack this component of the shear force resistance is greatly reduced or lost entirely, and an alternative load path involving tension in the webs is initiated.

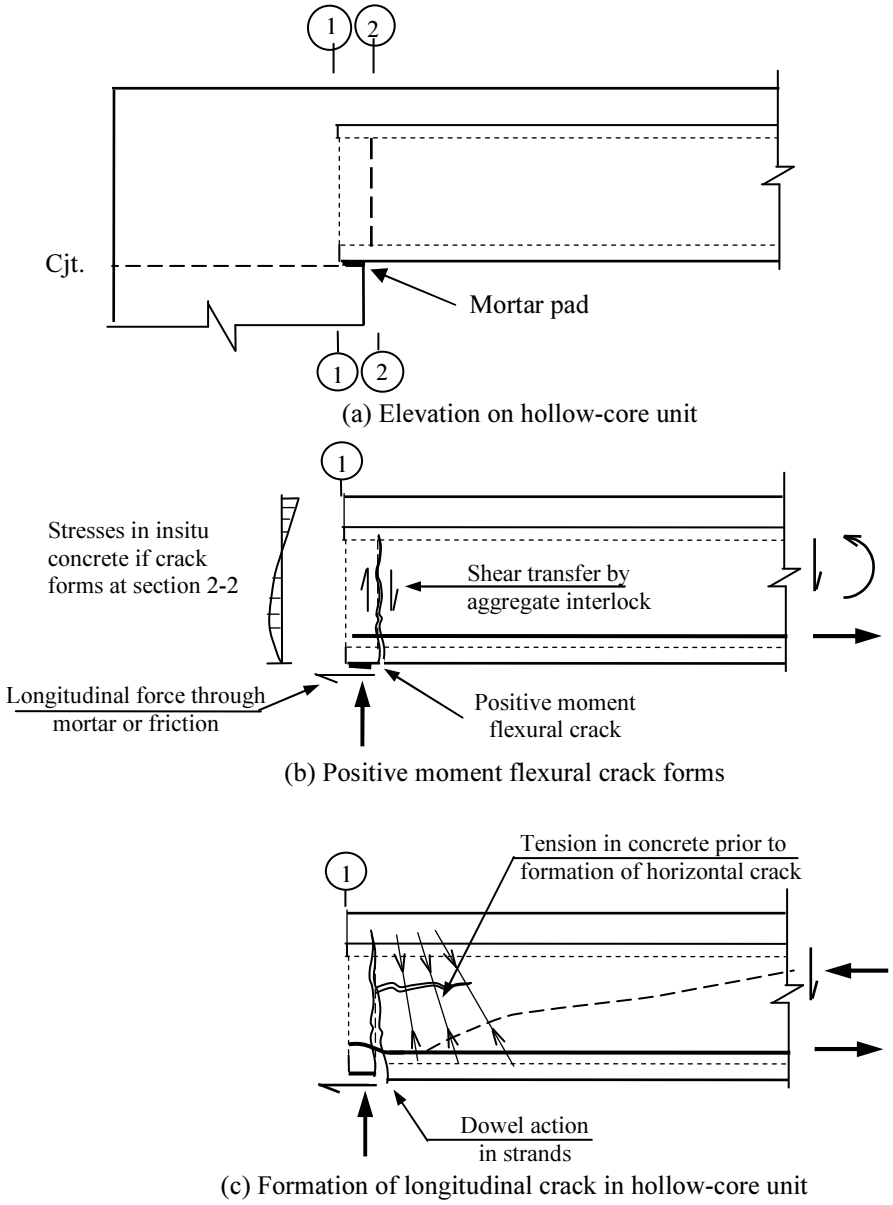

Figure A-18: Positive moment failure of hollow-core units

At the initial stage as the crack widens and shear transfer by aggregate interlock action is reducing the shear transfer by dowel action of the strands is limited due to the flexibility of this mechanism. The near vertical tension stresses in the webs develop to balance the loss in shear transfer by aggregate interlock action, see Figure A-18 (c). When these tensile stresses reach a critical level a crack forms

and it extends in a near horizontal direction, which increases the shear displacement across the near vertical portion of the crack, which allows dowel action of the strands to be mobilised. Continued elongation of the main beams results in a further increase in crack width until failure occurs with the strand pulling out of the concrete. In the Matthews test of a floor slab [Matthews 2004] collapse occurred when the elongation of the plastic hinges in the beams near the support points for the hollow-core units were of the order of 12mm. This implies that the crack widths at the face of the support were of the order of 12 mm. In the individual units tests [Bull and Matthews, 2003], the crack widths and elongation were not directly measured. However, a photographic record together with deflection measurements indicate that collapse occurred when the positive moment flexural crack was of the order of 10 to 15mm in width.

In the tests described above the effect of vertical seismic ground motion was not considered. The rapidly alternating vertical accelerations associated with vertical ground motion, could be expected to result in failure at reduced crack widths.

There is another possible trigger for this form of failure. The 75 mm plug of concrete cast into the ends of the hollow-cores may act as a dowel. If bond between this plug and the hollow-core concrete is poor the plug can only be broken by prying forces acting at the end of the plug and the back face of the hollow-core unit. The theoretical magnitude of these prying forces is sufficient to split the web of a hollow-core unit [Fenwick et al, 2004]. Once the horizontal web crack has formed the failure mechanism follows the mode previously described for positive moment failure.

Breaking out the cells at the end of a hollow-core unit, adequately reinforcing them and filling with insitu concrete prevents the development of a positive moment failure at the critical section. The reinforcement in the cells effectively laps the transfer length of the strands and this increases the positive moment flexural strength. If a positive moment flexural crack does form the reinforcement significantly increases the shear force that can be resisted by dowel action. Finally if this crack did develop the vertical component of the tension force in the bars where it crossed the crack would prevent collapse. However, at this stage the hollow-core unit would have dropped 10 to 20mm off the supporting ledge.

A.5 Negative Moment Flexural Strength near Supports

A5.1 Introduction

Hollow-core units have generally been designed to resist gravity loading as simply supported units. However, to allow floors to act as diaphragms starter bars (also referred to as continuity reinforcement) are placed in the insitu concrete topping to tie the floors into the supporting structural elements. This establishes continuity, which enables negative moments and axial tension to be transmitted into a floor at it supports due to,

- creep, shrinkage and thermal movements,
- live loads,
- lateral forces due to wind or seismic actions,
- vertical seismic actions, and
- elongation of beams.

Prior to the publication of an amendment in 2004 to the New Zealand Structural Concrete Standard, NZS 3101-1995, starter reinforcing bars generally extended between 400 to 1,500 mm into the slab to lap mesh reinforcement [Woods, 2008]. The current Standard requires sufficient ductile reinforcement to be used in the topping concrete to eliminate the possibility of negative moment flexural failure under seismic conditions (NZS 3101: 2006, with Amendment 2, clause 19.4.3.6). From the length of the starter reinforcement that was typically used prior to 2006 it is apparent that the mesh reinforcement was not designed to sustain the magnitude of negative moments that could be induced in floors in major earthquakes. This gives rise to the possibility that a brittle negative moment failure may occur close to a support due to the low reinforcement proportion and non-ductile characteristics

of the mesh reinforcement. The critical section for negative moment flexure is at the point where either the starter reinforcement or reinforcement placed in broken out cells is terminated.

Negative moment failures of hollow-core units with 75mm insitu concrete topping have been observed in several research projects [Bull and Matthews, 2004; Liew, 2004; Jensen, 2006; Woods, 2008].

Mesh reinforcement typically has a maximum strain capacity of the order of 2 percent at fracture. The commonly used size, 665 mesh, has an area of 145 mm^2 per metre of width and a design strength of 485MPa. If this reinforcement is placed in a 75mm thick concrete topping the reinforcement proportion is below under 0.002 and the force that it can transmit across a crack corresponds to a stress in the insitu concrete of 0.94MPa, or a value appreciable lower than this if the tension force is assumed to disperse into both the insitu concrete and precast concrete above the voids. This tensile stress level in the concrete is well below the value that could be expected to result in cracking of the concrete. Consequently secondary flexural cracks cannot be initiated and only primary flexural tension cracks may be expected to form in negative moment zones. In a test of a 300 hollow-core unit with 75 mm topping the spacing of cracks was found to be close to 500 mm, which is consistent with the formation of primary flexural cracks [Woods, 2008].

Figure A-19 shows a 300mm hollow-core unit with 75mm topping concrete that has failed in negative moment flexure. The reinforcement in the topping concrete was 665 mesh with HD12 starter bars that extended for a distance of a metre into the span from the end of the hollow-core unit. A crack initiator was placed in the top 20mm of the instu concrete topping near the end of the starter bars to enable instrumentation to be mounted at the appropriate location. The use of a crack initiator should not have had a significant influence on flexural behaviour as had the specimen been older the topping concrete would most likely have contained cracking due to shrinkage. In fact shrinkage cracking did develop in the topping concrete in regions of the test unit away from the zone subjected to negative moments. The vertical portion of the crack opened up and the 665 mesh snapped. This was followed by the development of the horizontal crack along that formed between the voids, which was caused by the shear force acting on the lower portion of the hollow-core unit when shear transfer associated with aggregate interlock action was lost due to the increase in width of the crack.

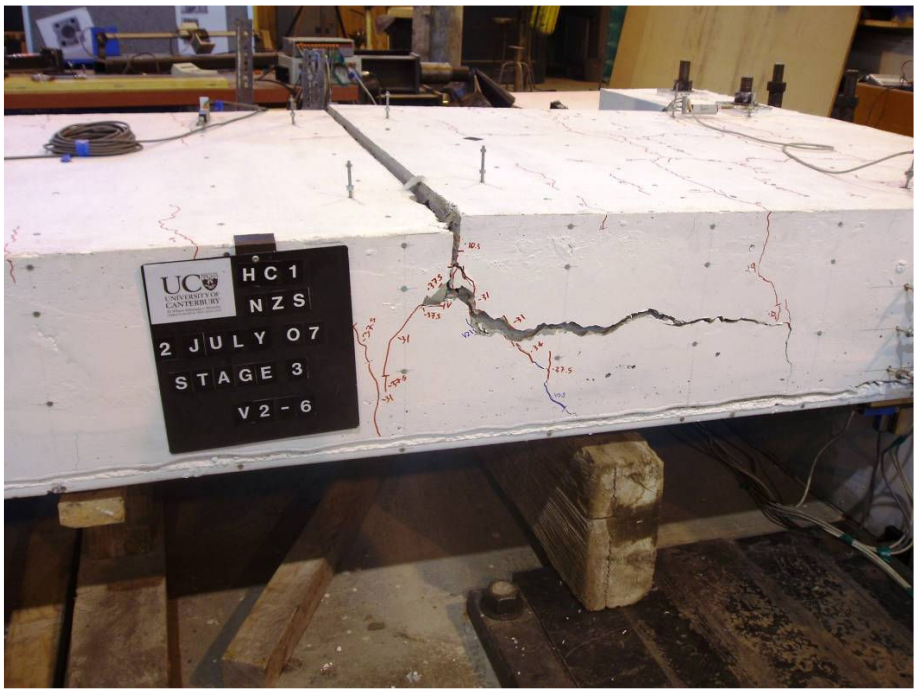

Figure A-19: Negative flexural crack at the termination point of the starter bars leading to a brittle shear failure in Woods' test

A5.2: Negative moment flexural strength of hollow-core floor

In design, or in planning a retro-fit, it is necessary to determine the maximum likely bending moment and axial forces that may be induced into the floor at its supports. In an assessment it is necessary to allow for the likely stress in the continuity reinforcement, as it is the forces transferred to the floor by this reinforcement that induces the majority of the negative moments near the supports. It should be noted that strains in the continuity reinforcement (starter bars and reinforcement in broken out cells) are induced by the opening of the crack at the back face of the hollow-core units. High strains may be induced at drift levels well below those expected in capacity design of structures. The process of assessing the performance of a floor has some similarity to the approach used in capacity design, but it is different. Strength reduction factors should be used except for continuity reinforcement, which should be assumed to have a stress strain relationship appropriate to reinforcement with an upper characteristic yield stress.

Figure A-20 gives a simplified stress strain relationship that may be used in assessing the moments and axial forces induced by continuity reinforcement at the supports. The values shown in this figure are based on a limited number of bars tests made at the University of Canterbury. In Figure A-20, where f_y is the design yield stress of the reinforcement. The maximum value of stress the reinforcement can resist is appreciable higher than the value suggested in NZS 3101, which appears to under-estimate maximum strain hardened stress levels.

To relate stress to strain in the continuity reinforcement the two assumptions, which are given below, have been made:

1. The development length of the reinforcement is taken as 2/3rds of the value given by NZS 3101: 2006, Equation 8-2. The two thirds value is used as the equation gives a design value, which is inherently on the conservative side. If it was used without the 2/3 factor strains and stress levels would on average be under predicted.
2. It is assumed that the strains vary linearly over the development length. Unfortunately there is no readily available experimental confirmation of this assumption. As an alternative, the expression $0.022 f_y d_b$ has been used to predict yield penetration of reinforcement in column bases [Priestley et al, 1996]. It was indirectly derived to give an equivalent extension for a well developed plastic hinge and it was not based on direct experimental evidence. If this value was used it would give strains which would be of the order of 1.25 times the values found using 2/3rds of the development length from NZS3101: 2006.

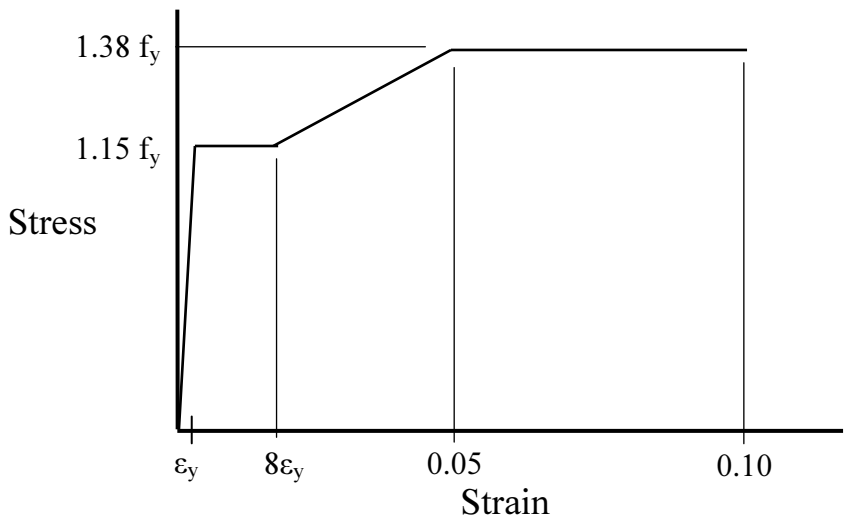

Figure A-20: Assumed stress strain relationship for continuity bars

Hollow-core floors constructed using mesh reinforcement with short starter bars, or with over-reinforced end connections, are prone to negative flexural failure. Tests have shown that the use of standard flexural theory over-estimates negative moment flexural strength and this theory needs to be modified to enable realistic negative moment flexural strength predictions to be made [Woods, 2008]. Allowance has to be made for,

- the low ultimate strain capacity of mesh, and
- the low reinforcement proportion of reinforcement in the insitu concrete topping.

As previously noted due to the low reinforcement proportion of negative moment reinforcement only primary flexural tension cracks may be expected to form with spacing of the order of 1 to 1.5 times the overall depth of the floor. With this spacing of cracks the influence of tension stiffening of the concrete on the strains in the mesh cannot be ignored.

Standard flexural theory for concrete members is based on three assumptions.

1. Plain sections in a region remain plain. It should be noted that this assumption applies to a region and not to the immediate vicinity of a single crack.
2. The strain in the reinforcement is either uniform or it varies linearly over the region.
3. The stress levels in reinforcement and concrete are assumed to be uniquely related to strain, with tensile stresses in concrete being neglected.

The depth of a neutral axis in a region is a function of the average tensile strain in the reinforcement and the average compressive strain on the extreme compression fibre, as shown on the left hand side of Figure A-21. However, in the flexural tension zone, due to the wide spacing of cracks and low reinforcement content, the concrete between the cracks resists a high proportion of the flexural tension force. This reduces the average tensile strain in the reinforcement, with the tensile extension of the tension zone being concentrated in the locality of the crack. To predict the peak tensile strain in the reinforcement at a crack from the average strain at the same level it is necessary to multiply by a strain concentration factor, S_{cf}. The situation is illustrated in Figure A-21.

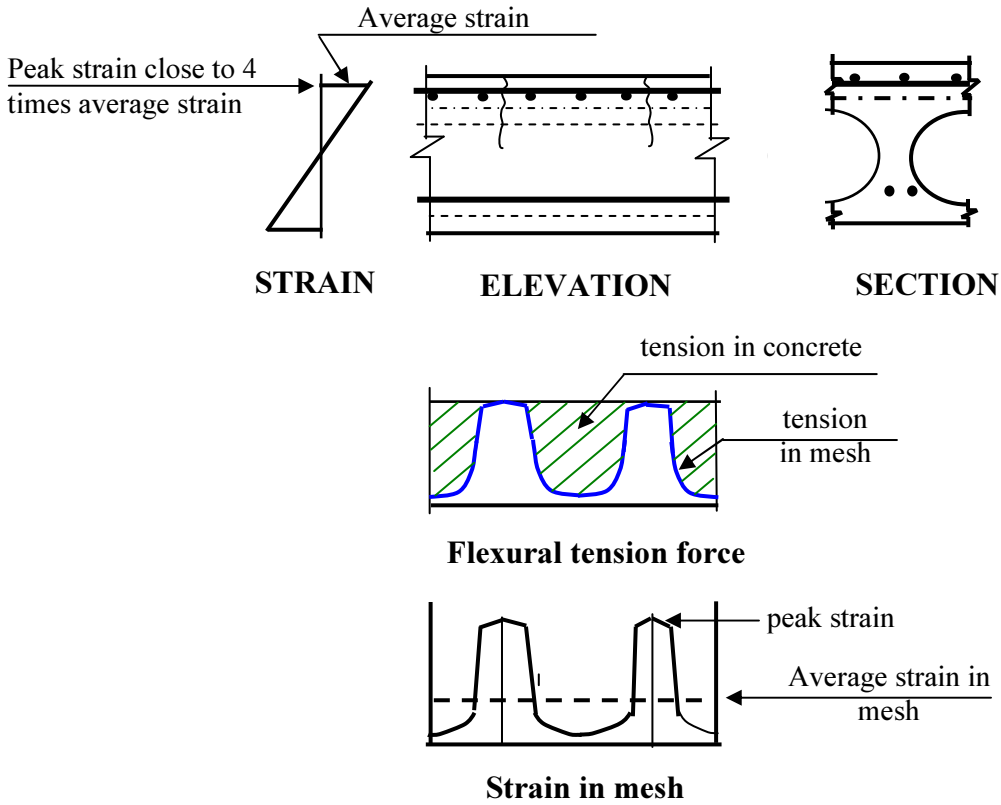

Figure A-21: Strains in negative moment zone of hollow-core floor

In the test of a 300 hollow-core unit with 75 mm insitu concrete topping it was found that the negative moment crack spacing was close 500mm [Woods, 2008]. With 665 mesh reinforcement (bar spacing in mesh 150 mm) the strain concentration factor, S_{cf}, was assessed to be close to 4. This value was predicted analytically on the basis of 500mm crack spacing, an assumption that the mesh was effectively anchored at the positions where it was welded to transverse bars and a calculated allowance was made for the bond stresses of plain bars cast in topping concrete using recommended values in [CEB-FIP Model Code, 1990]. The value of 4 was supported by experimental strain and displacement measurements. Assuming a strain concentration factor of 4 and that the ultimate limiting strain in the mesh is 0.02, gives an average limiting tensile strain of 0.02/4, equal to 0.005 in the reinforcement at the point where fracture occurs. The limiting average tensile strain in the mesh of 0.005 is used for calculating the depth of the neutral axis. With this limiting average tensile strain in the reinforcement the corresponding stress and strain values in the compression zone are within, or sufficiently close to the elastic limit of the concrete, to allow the flexural strength to be based on the assumption that the concrete in the compression zone remains in the elastic range. The commonly used rectangular stress block assumption for concrete stresses, which is based on a maximum strain of 0.003 in the concrete, cannot be used, as this assumption indicates the centre of compression force is located closer to the bottom fibre of the section than it would be in practice and this would lead to an over-estimate of the negative moment flexural strength.

For other depths of construction the strain concentration factor may be expected to vary with the spacing of primary flexural cracks, which is approximately proportional to member depth h. Hence, the strain concentration factor, S_{cf}, may be assessed from the equation:

$$S_{cf} = 4\left(h/375\right) \qquad \text{(Eq. A-2)}$$

A test has shown that the critical section for negative flexure can arise at the end of concrete filled reinforced cores of the units where these have been over-reinforced [Liew, 2004]. As shown by Liew this practice may have inadvertently make a negative flexural failure more likely to occur, especially if hair pin or paper clip shaped bars have been used instead of the two recommended single 16mm plain round bars placed in two cells at each end of the hollow-core member, see NZS 3101; 2006, clause C18.6.7.

If the amount of ductile reinforcement in the topping concrete is uniform in the span negative moment flexural failure of the hollow-core unit should not be a problem unless there is an exceptionally high seismic moment induced by vertical ground motion.

Gravity loads and vertical seismic actions need to be considered acting with two different critical moment patterns resulting from actions transmitted to the floor by the continuity reinforcement. The two critical moment patterns from the continuity reinforcement are:

- Maximum bending moment acts with no axial load, as shown in Figure A-22 (a). In this case it can be assumed that one end of the floor the bending moment is at its maximum potential value and at the other it is zero (acts as a pin support), with a linear variation of moment between the supports. With this bending moment it is assumed a compression force, which is equal to the tension force acts at the support sustaining the bending moment.
- The moment and axial force applied by the continuity reinforcement is not accompanied by a corresponding compression force between the hollow-core unit and the support. In this case the bending moment arises as the resultant tension force in the continuity reinforcement and its eccentricity to the neutral axis of the floor. With this alternative it is assumed that bending moments and axial forces induced by the continuity reinforcement at the supports are uniform along the span of the floor, see Figure A-22 (b).

The end conditions of a floor vary considerably during an earthquake. However the two cases described above are thought to give conservative values for assessment or design.

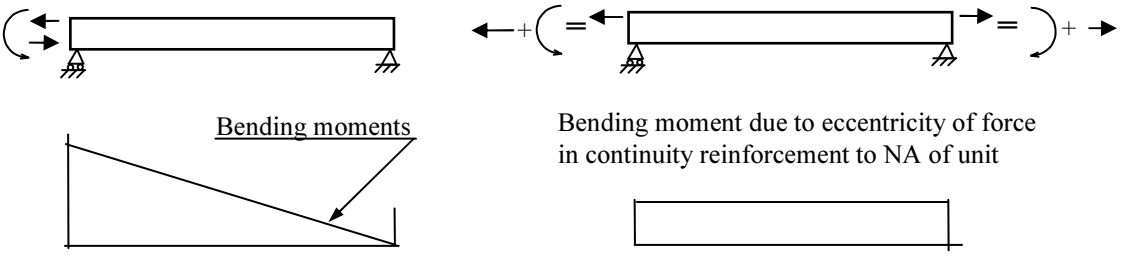

(a) Maximum bending moment and no axial load

(b) Maximum axial load due to elongation

Figure A-22: Critical actions induced by continuity reinforcement

The bending moments due to gravity loads and vertical seismic ground motion are added to the bending moment induced by the actions at the supports, see Section 3.5. The gravity load and seismic actions due to vertical ground motion can be found from the New Zealand Earthquake Actions Standard, NZS 1170.5 [SANZ, 2004]. With mesh reinforcement a structural ductility factor of 1.25 should be used due to its relatively brittle characteristics. Where ductile reinforcement is used over the whole surface of the floor the structural ductility factor may be increased to 2.0. These values are selected on the basis that;

- mesh has a very low ductility,
- hollow-core units with insitu concrete topping have very different stiffness characteristics for loading in the upward and downward directions, which could be expected to result in increased upward displacement in an earthquake. (The equal displacement and equal energy concepts in seismic design are based on the assumption that the structure has equal strengths and stiffness values in both directions.)

A6 Shear strength of hollow-core floors

A6.1 General Behaviour of hollow-core units under gravity loading

Hollow-core units are designed to resist gravity loads as simply supported members. In New Zealand pretensioned strands are generally located close to the soffit, which gives hollow-core units high positive moment flexural strengths but low negative moment flexural strengths. The shear in positive moment zones in the region where there are no flexural cracks and it is outside the transmission zone for the pretensioned reinforcement, is resisted principally by the vertical component of the flexural compression force, as illustrated in Figure A-23. The shear strength of a prestressed member without shear reinforcement is limited to the shear force that induces diagonal cracking. This may arise in two ways, namely by flexural shear cracking or by web shear cracking.

Flexural shear cracking controls the shear strength provided by concrete in regions which contain flexural cracks. This form of shear failure is not expected in simply supported floors containing pretensioned units under gravity load conditions. In these floors flexural cracking is only likely to occur under overload conditions and in the mid-span region where the shear stresses are low. However, the addition of continuity reinforcement can result in negative moments being induced near supports, which can change the critical criterion from web shear diagonal cracking to flexural shear diagonal cracking.

Web shear cracking can develop in a region of a beam that does not contain flexural cracks but is subjected to high shear stresses. This form of diagonal cracking is generally critical in low moment zones in members with thin webs. Diagonal tension web shear cracks form when the principal tensile stress reaches the direct tensile strength of the concrete. The shear stress in the web at a location in the section, v, prior a to the formation of flexural tension cracks in the member is approximately given by:

$$v = \frac{V\,Q}{I\,b} \approx 1.5\frac{V}{h\,b} \qquad \text{(Eq. A-3)}$$

Where V is the shear force, Q is the first moment of area above the fibre being considered about the neutral axis, I is the second moment of area about the neutral axis, b is the width of the fibre being considered and h is the overall depth of the section.

In NZS 3101-2006, the design principal tensile strength of the concrete, f_{dt}, is taken as $0.33\sqrt{f_c'}$. The magnitude of the shear stress, v_{max}, causing the principal tensile stress increases with the longitudinal compression stress, f_{lc}, and it is given by:

$$v_{\max} = f_{dt}\,(\sqrt{1 + f_{lc}/f_{dt}}) \qquad \text{(Eq. A- 4)}$$

where f_{lc} is taken as positive for compression and f_{dt} is taken as positive for tension.

With the different 300 hollow-core sections, the minimum total web width varies, but typically it is greater than 180mm, while with the 200 mm hollow-core sections the corresponding width is greater than 240 mm for the Stresscrete sections. (The effective web widths for Stahlton sections are on the high side of these values). Making a conservative assumption that the longitudinal compression stress is zero gives a critical shear stress of $0.33\sqrt{f_c'}$ for the formation of a web shear crack. On the basis of the approximation given by Equation A-3 the calculated shear sustained at diagonal web shear cracking, V_{cw}, is given by:

$$V_{cw} \approx 0.22\, b_w\, h\sqrt{f_c'} \qquad \text{(Eq. A-5)}$$

where b_w is the minimum width of the web being considered and h is the depth of the unit. Assuming the concrete strength at the critical fibre is 50MPa and using the minimum web widths given above, the nominal shear strengths are close to 100kN for both 300 and 200 hollow-core units with 75 mm topping. From this assessment it is concluded that shear failure due to gravity loading is not critical for the composite floor provided negative moments, which may lead to flexural cracking of the hollow-core unit, do not act.

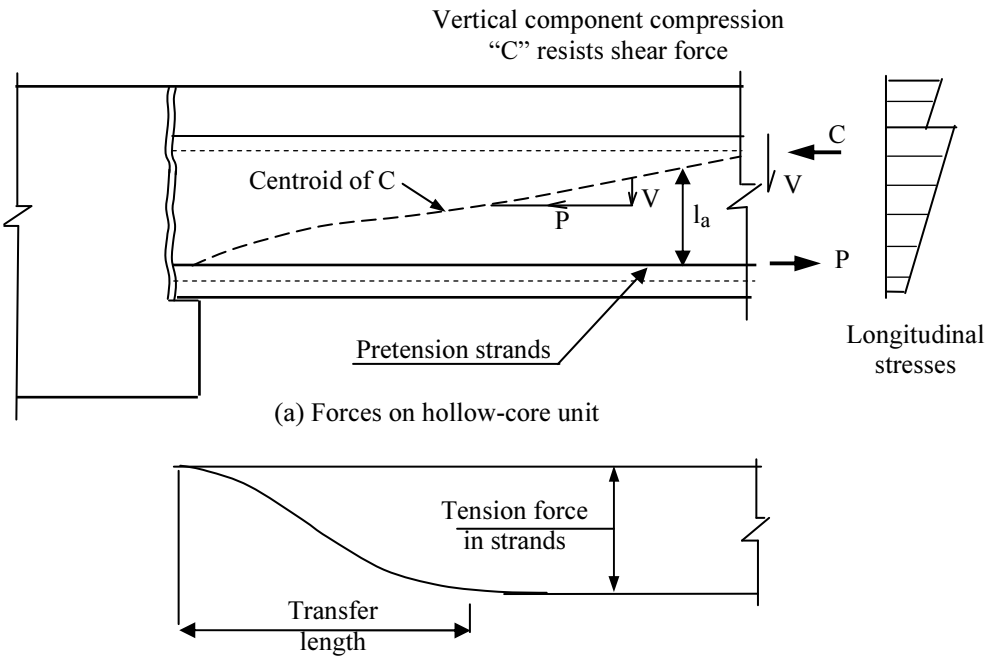

Figure A-23: Behaviour of hollow-core floor under gravity loading with units acting as simply supported units

A6.2 Shear strength in negative moment zones

As discussed in Section A6.1, hollow-core units close to their supports have relatively high shear strengths when they act as simply supported members subjected to gravity loads. In this situation the shear strength is limited by web shear cracking. However, when continuity is established with the addition of starter bars in concrete topping and reinforcement in cells that have been broken out and filled with concrete, gravity loads and seismic actions can transmit both negative moments and axial tension to hollow-core floors. The shear strength in the negative moment region in this case is limited by the flexural shear cracking strength. Hence the shear strength of this region can be influenced by continuity reinforcement, which ties the floor to the supporting structure.

At the back face of the hollow-core unit, wide cracks may develop in a major earthquake due to elongation of beams that are parallel to the precast units and to rotation of the supporting structural element (beam or wall) relative to the floor. Reinforcement crossing this crack may be stressed to a high level, as discussed in Section A5.2. As shown in Figure A-24 (a), the tension force resisted by the reinforcement in the insitu concrete topping decreases as the distance of the section increases from the support. This is in part due to the decrease in bending moments and in part due to the transfer of the pretension force to the concrete. In Figure A-24(c) the equilibrium of the concrete between the two cracks is illustrated. The change in tension force, ΔT, in the reinforcement in the topping concrete applies a shear force to the concrete. The resultant shear stress is found by dividing ΔT by the distance between the cracks, Δx, and the width of the web at the level being considered, as illustrated in parts (c) an (d) of the figure. The shear stresses in the compression zone are increased due to the inclination of the compression force along the member. However, this increase in shear stress is not critical as the longitudinal compression stresses in this region suppresses the diagonal tensile stresses. It is the shear stresses sustained in the flexural tension zone of the member that cause flexural shear cracking to develop.

A series of analyses were made of the hollow-core floors subjected to gravity loads and seismic actions induced by forces in starter reinforcement in the insitu concrete topping [Woods, 2008]. In these analyses the influence of having different quantities of reinforcement in the concrete topping on shear stresses was investigated for two different loading conditions. In the first loading condition it was assumed that the continuity reinforcement applied a pure bending moment to the end of the hollow-core floor. In the second case it was assumed that elongation had displaced the hollow-core units across the supporting ledge so that the tension force resisted by the topping reinforcement could not be balanced by a corresponding compression force at the support. In this case the tension force applied a moment and axial tension force to the composite hollow-core unit and the topping concrete. The bending moments arose from the eccentricity of the continuity reinforcement to the neutral axis of the composite section.

From the analyses the following conclusions were made:

1. Changing from applying a pure moment across the crack at the back face of the hollow-core units to applying an eccentric tension force (axial tension and associated bending moment in the hollow-core unit with its concrete topping) in the starter (continuity) reinforcement did not significantly change the critical shear stresses in the flexural tension zone.
2. Increasing the amount of reinforcement in the topping concrete increased the length of floor subjected to negative moments but it did not significantly change the magnitude of the critical shear stresses. The critical section was located at a distance of approximately an effective depth from the edge of the support.
3. The shear stress levels in the flexural tension zone near the critical section were for practical purposes equal to those that would be sustained by a reinforced concrete beam with the same dimensions.

The conclusions from these analyses regarding shear strength in negative moment zones for hollow-core units without top strands were:

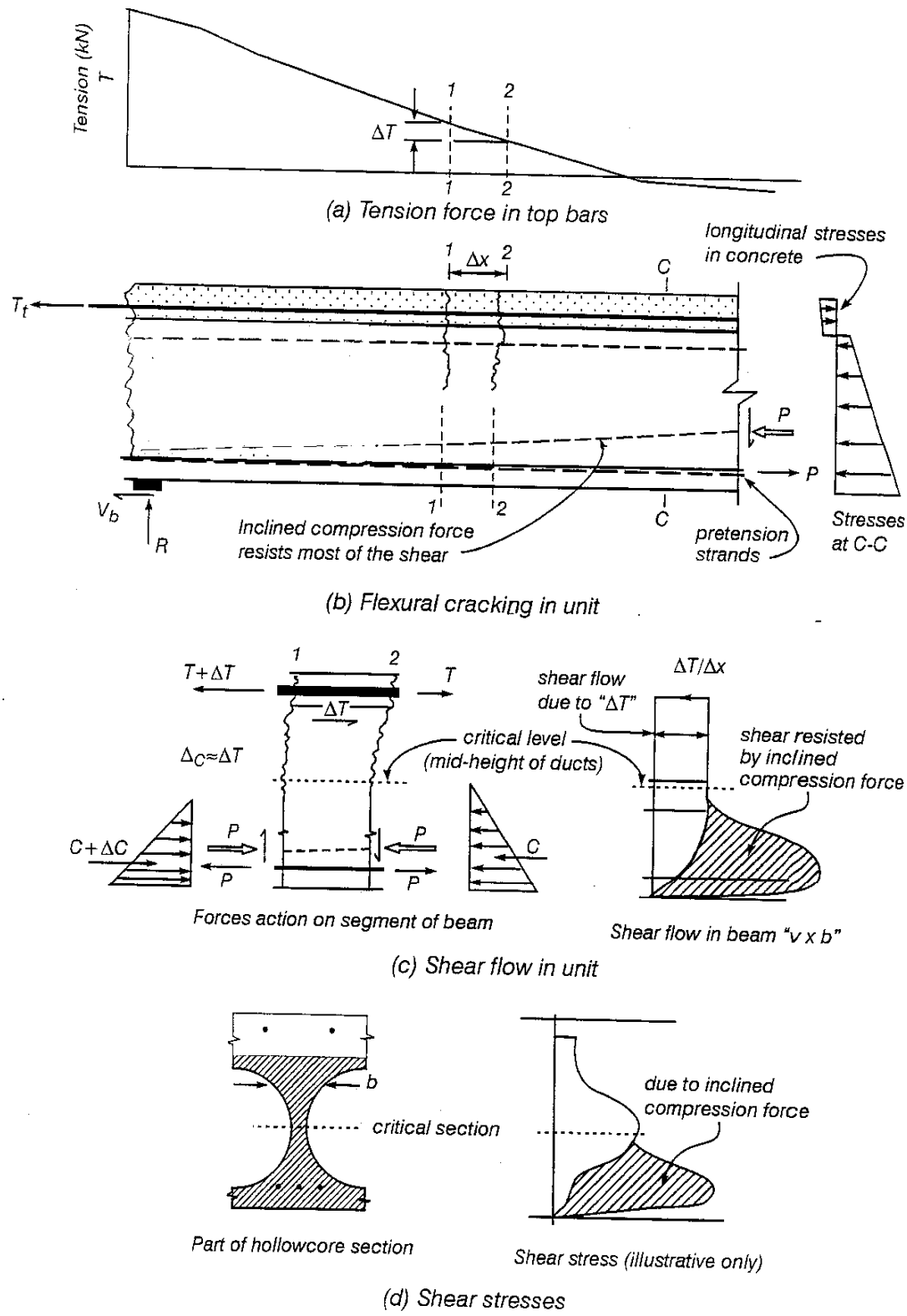

Figure A-24: Shear stresses induced in hollow-core units

- The critical section for shear in negative moment regions should be taken at a distance of an effective depth out from the edge of the support, and where cells were filled and reinforced at the end of the filled cells;
- The shear strength should be calculated in a similar manner to that for a similar shaped reinforced concrete member;

- Where a hollow-core floor with hollow-core units that contain near circular voids the design shear stress limit may be increased for the reasons outlined in the following paragraph.

The presence of some compression in the concrete from the pretensioned strands and the presence of the voids increases the height of the zero strain fibre in the section when compared to a rectangular reinforced concrete section of a similar depth. This increase in height of the neutral axis combined with the reduction in width of the cracks due to tension stiffening, reduces the width of the flexural cracks in the mid-height zone of the hollow-core unit where the highest shear stresses in the tension zone are sustained. It has been shown that the shear stress that can be sustained in the flexural tension zone of a reinforced concrete beam increases as crack widths are reduced [Collins and Kuchma, 1999]. In hollow-core sections with near circular voids, crack widths are small where the web width is close to its minimum. Where the crack widths are greater, the web width is also greater. Consequently, taking the effective shear area as the minimum web width times the effective depth, as defined the Concrete Structures Standard, NZS 3101 2006 [SANZ, 2006], higher shear stresses may be sustained than in a corresponding beam with a uniform width of web, or the web is of uniform thickness over a considerable portion of the height of the void.

The critical shear stresses given in NZS 3101: 2006, with amendment 2 (clause 19.3.11.2.4) recognises the effect of crack width and shape of voids on shear strength in hollow-core units. Limiting design shear stresses carried by concrete are given as;

- $0.2\sqrt{f_c'} \leq 1.43MPa$ for hollow-core units with a depth of less than 350mm and with near circular voids;
- $(0.10+10p_w)\sqrt{f_c'} \leq 0.2\sqrt{f_c'}$ where the uniform height of the voids exceeds ¼ of the depth of the unit, or where the depth is greater than 350mm.

It is noted that the design approach given by ***fib*** Commission 6 recommends determining negative moment shear strength as though the critical section was prestressed [FIB Commission 6, 2000]. However, this approach does not consider aspects such as elongation or capacity design and it recommends details which differ considerably from New Zealand practice.

On the basis of recent research findings recommendations have been included in Amendment 2 to NZS 3101-2006 for the design of precast units for shear in negative moment zones. These recommendations should be used as a basis in retro-fit analyses and for the design of new structures.

A7 Incompatible Displacements

A7.1 General

There are a number of situations where under seismic excitation appreciable differential displacement may arise between a hollow-core unit and other structural elements. Such displacements can lead to the transfer of high forces between the hollow-core unit and adjacent structural element, and these can cause extensive cracking to occur in the hollow-core webs. Figure A-25 illustrates two such cases. Part (a) of this figure shows a hollow-core unit adjacent to a beam. The Concrete Structures Standard, NZS3101: 2006, (Clause 18.6.7) requires the beam and hollow-core unit be linked by a thin flexible slab, known as a "linking slab". This slab has a minimum clear span equal to or greater than the larger of 600mm or six times the thickness of the linking slab. This allows differential displacement to develop between the hollow-core units in the floor and beam without endangering the hollow-core unit.

Part (b) of Figure A-25 shows hollow-core units supported on adjacent pairs of walls. Seismic actions cause the walls to deform inducing relative vertical displacement between adjacent hollow-core units. A linking slab should be used in this situation to prevent damage from being induced in the precast units. A floor that was supported on pairs of walls was tested in a similar arrangement to that shown in Figure A-25 (b). However, in this case there was no linking slab [Restrepo et al, 2000]. It was found that extensive cracking occurred in the webs of the hollow-core units at relatively small drifts.

It should be noted that in this test it was predominantly the webs that failed and there was little separation at the horizontal interface of the insitu concrete and hollow-core unit.

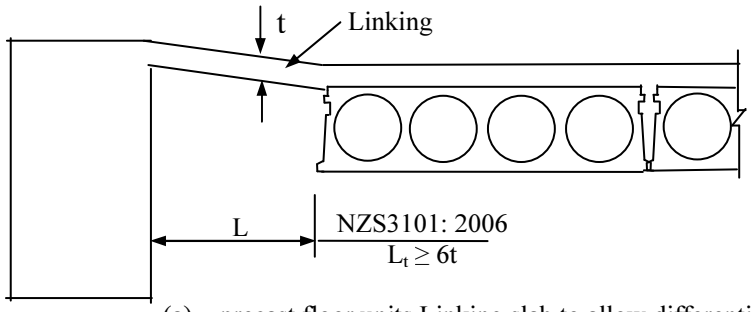

(a) precast floor units Linking slab to allow differential movement between beam and floor

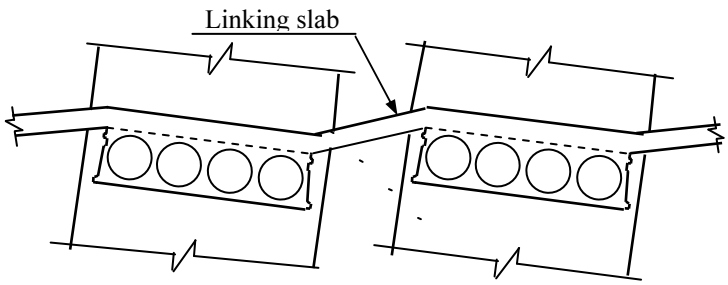

(b) Hollow-core units supported on adjacent walls

Figure A-25: Linking slab to accommodate incompatible displacements

There are a number of other situations where a structural arrangement can result in major differential displacements occurring between precast floor units and other structural elements due to earthquake actions. Particular caution is required in designing or assessing buildings in these cases. Figure A-26 shows one such case where corner columns in a frame building have been omitted. This practice has been used as it reduces the uplift on corner columns that have little axial load to hold them down.

In the building shown in Figure A-26 seismic actions cause the corner of the building to rise or fall with inter-storey drift. As illustrated this can induce significant differential displacement between the hollow-core units and adjacent columns and beams. Lau tested a 1/3 scale floor and frame with a layout similar to that shown in the figure [Lau, 2007]. The test results showed that the linking slab in his test unit, which had a clear span to depth ratio of 3.75, had concrete spalling in the linking slab and beam due to differential vertical displacement at a storey drift of 0.02. In this test pretensioned stem units were used, which had greater flexibility than hollow-core units.

Another situation where major differential displacement may occur is where hollow-core units span past an eccentrically braced frame, as illustrated in Figure A-27.

Very few buildings existing in 2010 will have a flexible linking slab to connect precast floor units to beams or other structural elements (beams or walls). Consequently in planning retrofit of hollow-core floors it is essential to assess the extent of damage and danger to life due to the differential displacement between a hollow-core unit and a beam, a wall, or other precast floor units.

A structural test of a floor in which no linking slab was provided showed that extensive cracking developed in the webs of the hollow-core units due to differential deflection of the beam and hollow-core units. Web cracking separated the tension flange from its compression flange within the hollow-core units, as shown in Figures A-28 and A-29 [Matthews, 2004], which contributed to the premature collapse of the floor.

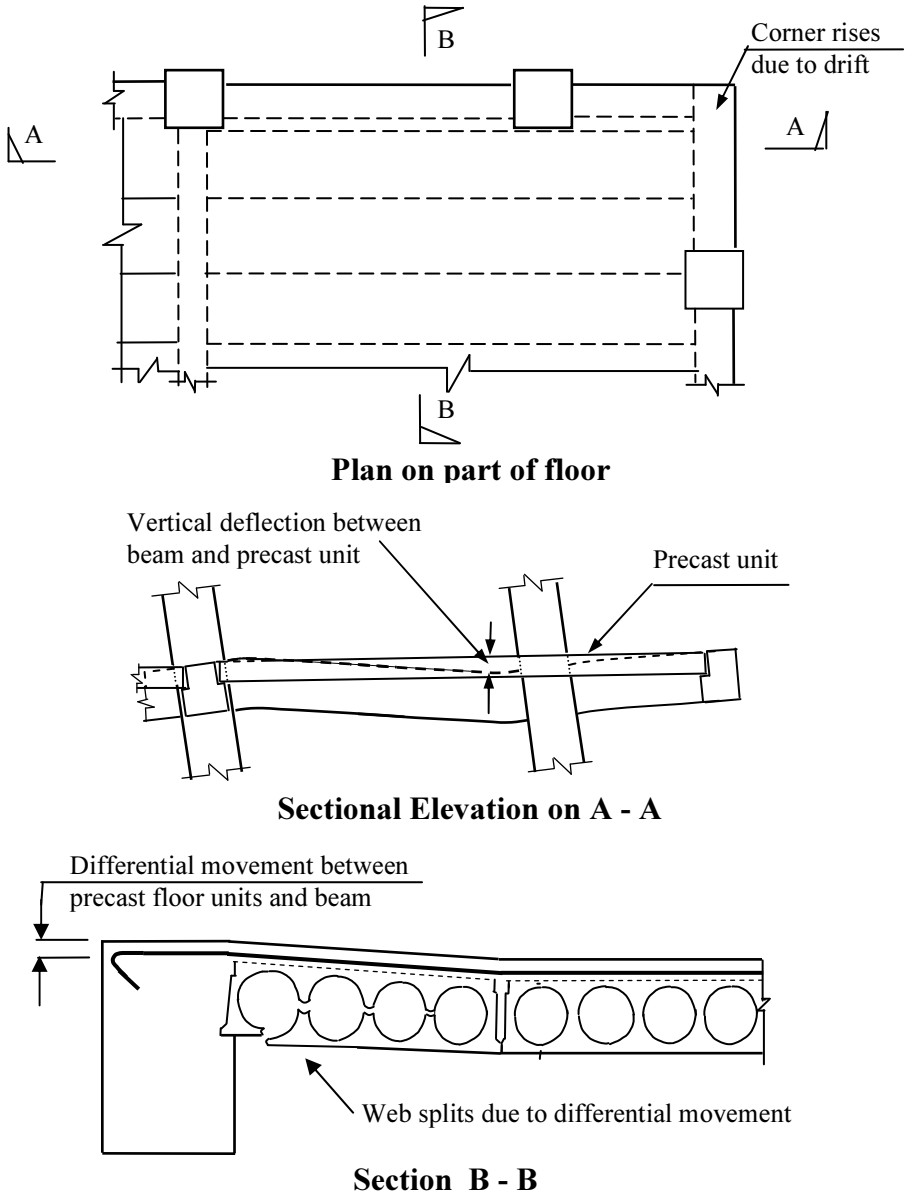

Figure A-26: Incompatible displacements between beam and hollow-core floor units

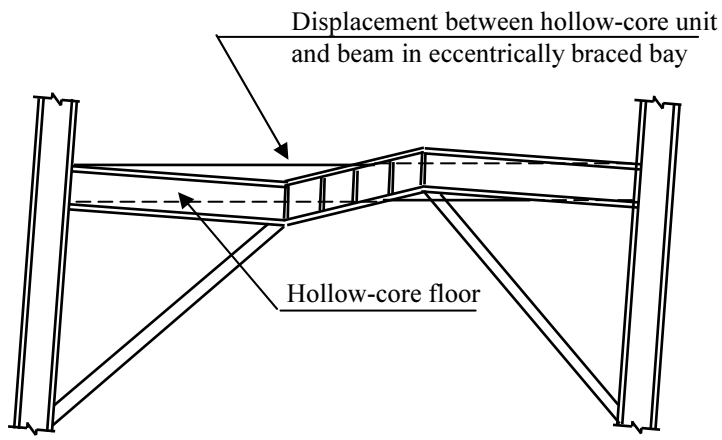

Figure A-27: Eccentrically braced bay and hollow-core floor

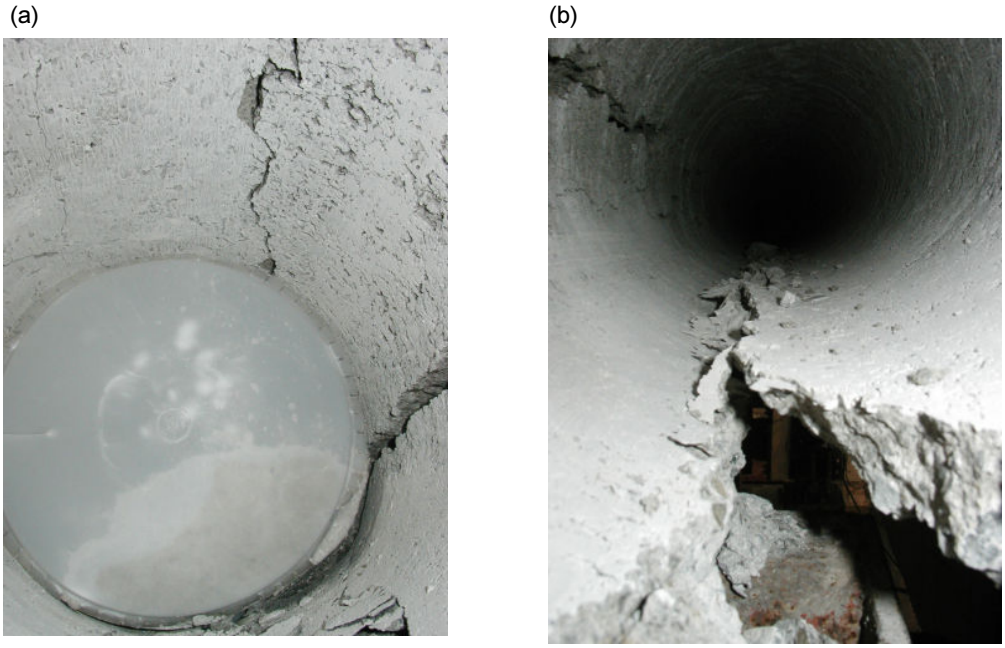

Figure A-28: Cracking in web of hollow-core units [Matthews, 2004]

Figure A-29: Web splitting seen after failure of lower portion of hollow-core unit [Matthews, 2004]

A7.2 Failure mechanism and analytical model

Figure A-30 illustrates the actions arising when differential displacement develops between a beam and adjacent hollow-core unit. These actions are complex as longitudinal flexure, shear, torsion and bending interact with flexural, shear and axial forces sustained within the section due to section distortion.

Figure A-30 (a) shows the structural arrangement of a beam cast against the side of a hollow-core unit that is deflecting upwards relative to the floor. This movement is related to the formation of a plastic hinge in the beam. Several different actions may arise due to this displacement.

1. With the rotation of the hollow-core unit a membrane type action is induced as the horizontal projection of the diagonal increases in length and a compression force is induced to restrain this increase in length, see Figure A-30 (a).
2. The lateral compression force acts on concrete below the void next to the beam and in the insitu concrete at the far side of the hollow-core unit, see Figure A-30 (b).
3. The horizontal shear induced in the webs by the lateral membrane force may cause the webs to fail as illustrated in Figure A-30 (c).
4. The vertical deflection of the beam causes the concrete above the cores to act as a slab to resist flexure and shear as illustrated in Figure A-30 (d).
5. The flexural forces resisted by this slab action induces forces on the webs, as illustrated in Figure A-30 (d), which may lead to cracking of one or more webs. In the event of failure of some of the webs the concrete and reinforcement above the voids and the cracked webs web can now transmit direct forces onto the next web, possible causing it to split, see Figure A-30 (e).

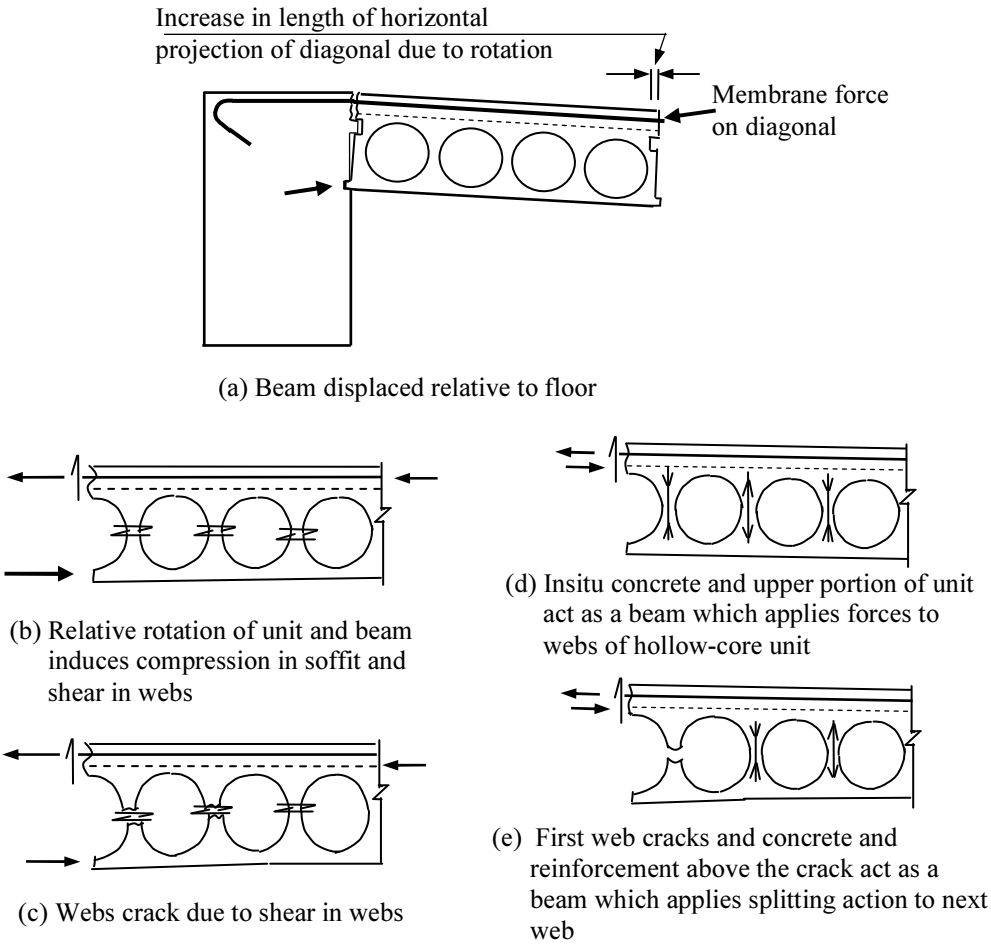

Figure A-30: Actions leading to cracking of webs

A7.3 Design limits for differential movement of beam and floor slab

The stresses induced by differential displacement of the hollow-core floor slab and an adjacent beam are complex. To obtain a limit for design the test results obtained by [Matthews, 2004] were examined. It was found that the failure shown in Figures A-28 and A-29 occurred on the second

occasion that the drift ratio reached 0.025. Allowing for the flexural deformation in the columns the drift of 0.025 corresponded to a rotation of the columns at floor level of approximately 0.0235 radians. It is believed that before this stage was reached at least two of the webs had been extensively cracked. To obtain a design limit for retrofit assessment the test arrangement was analysed to assess the relative vertical movement between the floor and the adjacent beam in the perimeter frame when the rotation of the column at the floor level was 0.0235 radians. The method of analysis that was used is suitable for practical assessment and it is the approach recommended in Section 6.8. In this analysis the differential movement between a beam and floor slab, similar to that illustrated in Figure A-31, is assessed.

As described in Section 6.8 the deformation of the beam can be broken down into two components. The first is the deformation corresponding to elastic deformation and the second arises from plastic deformation.

The elastic deformation is calculated on the basis that the bending moments vary linearly from one end of the beam to the other, with a positive moment at one end and a negative moment of equal magnitude at the other end. The deflected shape is assessed from the beam curvatures on the basis that curvature was proportional to the bending moment and at the limiting position where the reinforcement reached yield it was equal to $2\varepsilon_y / h_b$, (twice yield strain divided by overall beam depth) which is a close approximation to a value suggested by [Priestley, 1998]. As the deflections due to elastic curvature are not high approximations involved in these assumptions are not very significant.

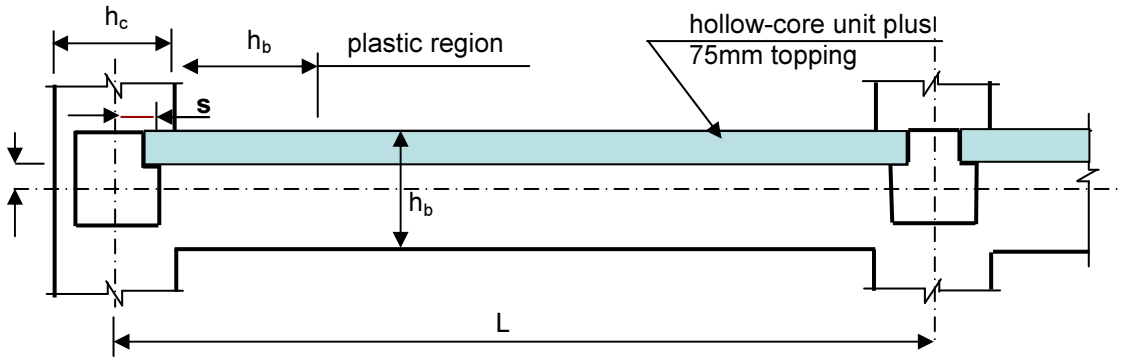

Figure A-31: Beam with hollow-core unit

The plastic deformation was assessed on the basis of the following assumptions;

- The shear deformation in the plastic hinge zone is neglected;
- The length over which reinforcement yields in a plastic hinge is equal to the beam depth, h_b;
- The strains in the reinforcement varied linearly form the peak value at the face of the column to the yield strain at the low moment end of the plastic hinge.

It should be noted that major approximations are involved in these assumptions. Firstly shear deformation is not negligible but in practice it is difficult to determine with any level of accuracy. Secondly plastic hinge lengths vary with the magnitude of inelastic deformation that they have sustained and the moment to shear force ratio. Generally for a well developed plastic hinge the length over which reinforcement yields is in the range of h_b to $1.25h_b$. While reinforcement strains have been observed to vary from their peak value at the face of the beam to the yield strain in an approximately in a linear manner [Fong, 1978] this assumption does not directly account for yield penetration that occurs into the column.

On the basis of the assumptions listed above the values given in Table 6.2 in Section 6.8, which relate the rotations of columns at a level to the vertical movement of a beam relative to a floor, were calculated. The test results from the Matthews test [Matthews, 2004] were analysed to calculate the critical vertical displacement. At failure the limiting drift was 2.5%, with failure and it occurred the

second time the limiting drift was reached. As previously noted this drift corresponded to column rotations of 0.023 radians. As this resulted in failure this value needs to be reduced to give a small margin at safety for the collapse limit state, say reduce to 90% of this value, but also noting that this drift limit was sustained twice, giving a value of 0.021 radians.

As the hollow-core units were not supported on transverse beams at the central column no allowance needs to be made for the displacement of the support of the hollow-core unit due to rotation of the columns. Using the critical column rotation of 0.021 and Table 6-2 the critical vertical displacement of beam relative to floor is found to be 11.61mm. This value corresponds to the collapse limit state. To obtain the equivalent ultimate limit state it is necessary to divide by 1.5 (see Chapter 3). With this adjustment the critical differential deflection for the equivalent of the ultimate limit state corresponding to the test result is 7.74mm, which is rounded down to **7.5mm**.

With one or more of the hollow-core having been cracked the likelihood of additional webs failing depends on the stiffness of the concrete above the voids and cracked webs acting as a beam. Based on the assumption that it is the membrane type action that predominately influences the effective stiffness and strength of the concrete above the cracks the critical deformation can be modified to;

$$\frac{750}{(25+75)}\text{mm} \qquad \text{(Eq. A-6)}$$

where the 25 makes a nominal allowance for the thickness of concrete above the voids and 75 is the thickness of the insitu concrete topping in the Matthews test. For the Matthews test this gives a value of 7.5mm and for an insitu concrete toping of 65mm it gives a value of 8.8mm. When used for design, or assessment calculations, allowance needs to be made for the Structural performance factor, S_p,, so that the criterion is applied to the peak displacement rather than the design displacement (see Section 3.3.2) and the deformation factor, as illustrated in Section 6.8.

A7.4 Conclusions

1. A method of assessing web cracking due to incompatible displacements between a beam, or other structural element and a floor is described and tables to assist with calculations are given in Section 6.8.

2 The proposed deflection limit is based on a back analysis of one test result. Information from additional test results to give some idea of variability would be highly desirable, but such information is not available in the literature (2010).

4. The form of web cracking predicted by the method of assessment was seen in the Matthews frame floor test [Matthews, 2004]. The pictures in Figure A-28 and 29 show web splitting observed during a test where the beam was cast against the side of a hollow-core unit, and the top portion of a hollow-core unit after the remainder had collapsed.

A8.0 Torsion in Hollow-core Units

A8.1 General

As discussed in Section 6.9.1 torsional cracking has not been seen as a problem with hollow-core floors in buildings when subjected to gravity loading. The high stiffness of this form of floor and the strong one way action reduce the significance of torsional actions. This situation may not hold where high concentrated loads may act on the floor, such as may be expected in heavy industrial situations.

Potential problems may arise in buildings where lateral sway of a structure can induce significant twist into hollow-core units, such as illustrated in Figure 6-16 for a building with moment resisting frames with no corner columns. Figures A-32 shows a further potentially critical situation. In this figure a hollow-core unit is mounted on the active link of an eccentrically braced frame. However, hollow-core units mounted anywhere on beams in the eccentrically braced bay would be subjected to twisting. A very similar situation arises where a hollow-core unit is supported on a coupling beam between two

walls. In both cases the other end of the hollow-core unit is assumed to be supported by framing that does not rotate to the same extent as inter-storey drift occurs.

In both the cases described above significant twists are applied to the hollow-core units, which can be expected to cause extensive diagonal cracking. However, as indicated in Figure A-30, due to the twist the projected length of a diagonal on to the plane of the floor increases and this may induce diaphragm type action. The effect of the resultant compression force across the diagonal is unknown, see Figure A-32 (b), but it could well result in premature failure of the webs. This problem arises wherever one or more hollow-core units are twisted relative to other hollow-core units in the floor and it is clearly an aspect which needs further investigation.

As outlined in Section 6.8 torsional response of hollow-core units with insitu concrete topping can be assessed using the Structural Concrete Standard, NZS 3101: 2006. This approach is based on representing the unit as a thin tube. The method was developed by [Collins and Mitchell, 1989]. Several points should be noted.

1. The method is based on analysis and tests of individual members and hence it makes no allowance for interaction with other structural elements.

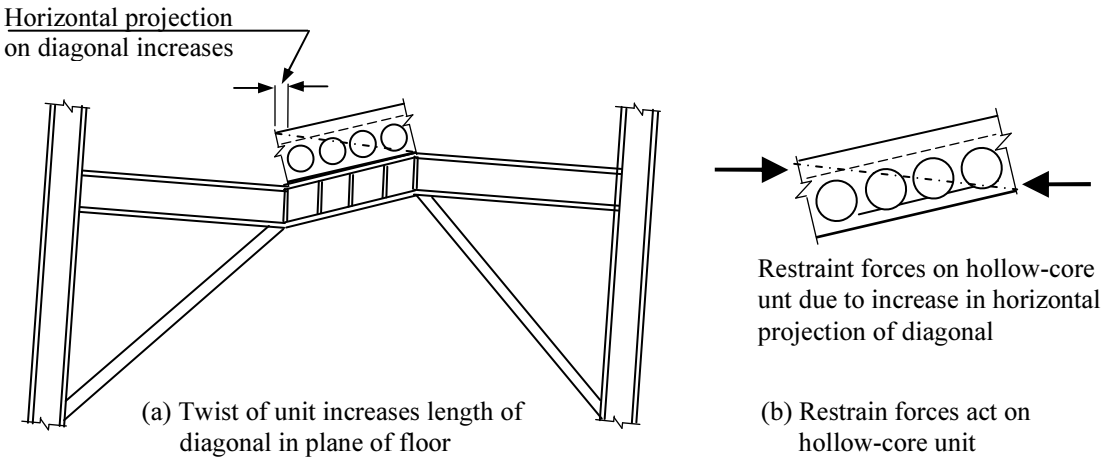

Figure A-32: Hollow-core unit mounted on active link of eccentrically braced frame

2. Other units in the floor can restrain elongation associated with diagonal cracking, which may significantly increase the torsional resistance.
3. Membrane action arising from an increase in the projected length of the diagonal, illustrated in Figure A-32 (b), may lead to premature cracking of the webs or possibly the floor lifting off its supports.
4. Diagonal cracking occurs when the principal tensile stresses in the concrete reaches the direct tensile strength of the concrete. The shear stress corresponding to this condition cannot be simply determined for two reasons;
   - Firstly the tensile strength of concrete cannot be readily determined from compressive strength. The CEB-FIP Model Code indicates the average direct tensile strength is equal to $1.4\sqrt[2/3]{f'_c/10}$, with upper and lower characteristic strengths of 0.68 and 1.32 times the average value. Consequently considerable variation could be expected between similar tests.
   - Secondly the longitudinal stress has a major influence on the magnitude of the principal tensile stress, and this varies with the prestress, gravity loads and stresses induced due to vertical ground motion. As the stresses vary round each section and from section to section and in time under seismic conditions calculation of the critical condition is impractical.

5 As noted in Section 6.8, Figure 6-17 (b), cracking in the concrete below the cores may in effect turn a hollow-core unit into a series of Tee beams with their top flanges connected by a slab. Such cracking might enable the hollow-core unit to sustain significantly greater rotation than would otherwise be the case.

6 A few hollow-core units, without concrete topping, have been tested in torsion and analysed using finite element analyses [Broo and Engstöm, 2005 & 2007]. It was found that the finite element analyses predicted behaviour accurately up to the formation of torsional cracking but not at higher displacements. The tests indicated a drop off in torsion resisted at cracking but complete failure did not occur until the twist reached about two and a half times the twist sustained at torsional cracking.

A8.2 Conclusion

Tentative design criteria are given in Section 6.8. However, it should be emphasised that there are many un-answered questions relating to torsional response of hollow-core floors as outlined above.

A9.0 Diaphragm Action of Floors

A9.1 General

The performance of floors in diaphragms is an area of active research at the University of Canterbury (2010). A number of aspects considered in this section are being examined in greater detail in the research project[2], which is likely to be completed in 2011.

Floors in buildings are required to provide robustness to a building. They are required to tie the different structural elements together so that seismic inertial forces can be distributed to the lateral force resisting elements at the same time as providing support to gravity loads.

In assessing diaphragm action in a building consideration needs to be given to;

- Overstressing of the floor system when subjected to displacements from the main structural elements to which the floor is connected (beams, columns, walls, steel bracing);
- Failure / lack of ductility of topping reinforcement;
- Loss of compressive stress load paths due to localised damage resulting from significant cracks forming in the diaphragms and at the boundaries between diaphragms and lateral force resisting elements;
- Failure of linking slabs between the main beam and adjacent hollow-core unit due to differential elongation, vertical displacements and shear transfer (see Section A7).

In assessing critical shear forces acting on diaphragms allowance should be made for the reduction in stiffness of the diaphragm associated with development of cracks due to elongation and other actions and with local damage in the floor (see Section A9.4).

A9.2 Development of wide cracks in floor diaphragms

The floor units and topping are part of the overall structural system and as such they are relied upon to maintain the integrity of the building structure. In particular, floors are required to act as diaphragms and to provide adequate restraint to columns at each floor level. It is generally recognised that there is a higher degree of integrity in an in-situ concrete floor than in a precast concrete floor, which inevitably contains significant discontinuities.

Displacements induced during major earthquakes and elongation of plastic hinges can induce wide cracks between floors and other structural elements, such as beams, columns and walls. The significance of this cracking on the ability of the diaphragm to tie structural elements together and to transmit shear forces between elements needs to be addressed in design or in an assessment of a floor.

[2] Gardiner, D., R, "PhD project on floors diaphragms in buildings", supervised by Bull, D. K. and Carr, A.

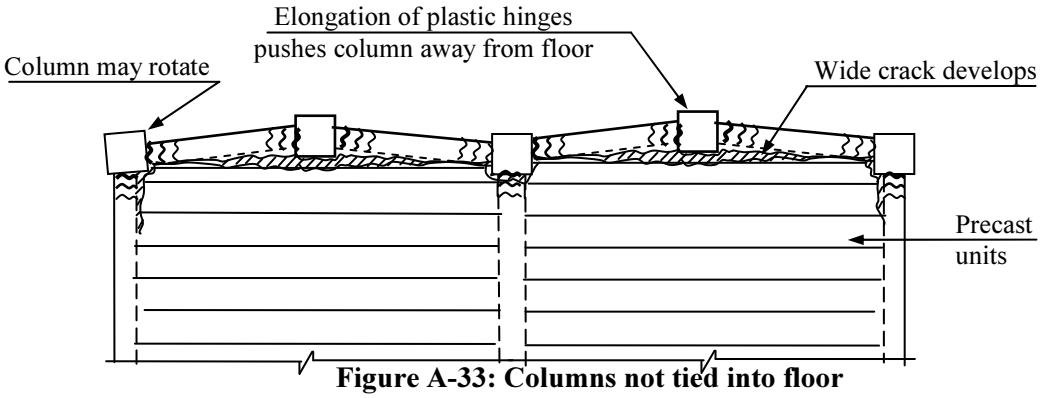

Figure A-33: Columns not tied into floor

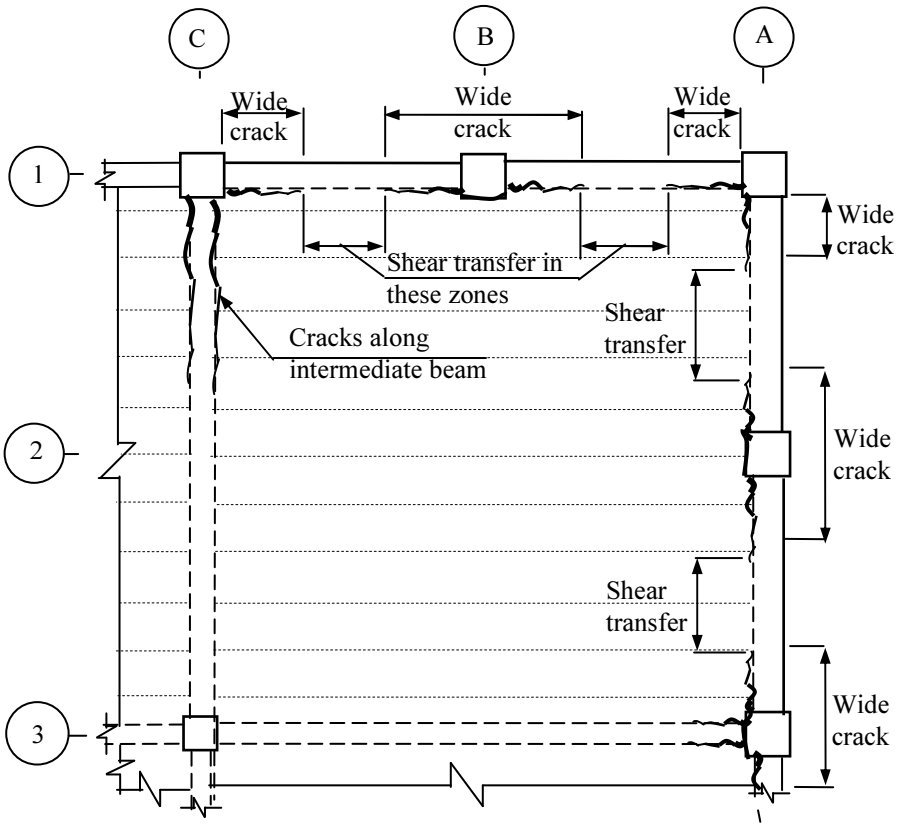

(a) Plan on part of a floor showing areas where shear can be transferred to perimeter frames

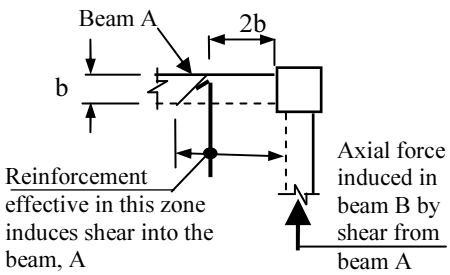

(b) Effective zone for reinforcement acting near a column

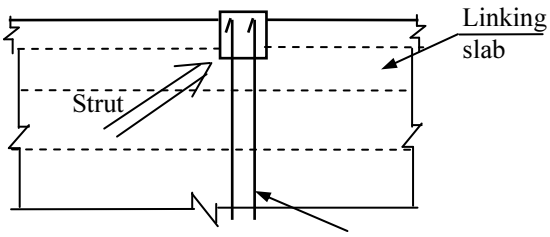

(c) Intermediate column acts as node for strut and tie forces to transfer shear to frame

Figure A-34: Location of cracks and strut and tie forces in a floor slab

Figure A-33 shows a floor with precast units and a perimeter frame where two of the columns that are not tied into the slab by beams, which is a similar situation to that in the Matthews' test [Matthews, 2004]. Elongation of the perimeter frame beams pushes the column out from the floor slab. If this occurs over several storeys this may cause the column to buckle. To prevent this loss of lateral restraint such columns should be tied into the floor, as required in NZS 3101: 2006, clause 10.3.6 (also see Figure A-34 (c)).

Due to elongation of plastic hinges wide cracks may open up between the hollow-core units and their insitu concrete topping and supporting structure. Where such cracks develop compression load paths cannot be sustained directly between the insitu concrete topping and the column. Therefore, the traditional method of using columns as the nodes of the "Strut & Tie" model (as described in NZS 3101: 2006) needs to be handled carefully if the diaphragm is required to transfer high seismic forces when the structure is sustaining appreciable inelastic deformation

Figure A-34 (a) shows locations of wide cracks, which may limit strut and tie action in a floor. The length of these cracks round a perimeter frame (lines 1 and A in the figure) depends on the relative strengths of the perimeter beams in lateral bending to the strength of reinforcement tying the floor into the beams. A method of assessing the lengths of these cracks is given in Section A9.3. A wide crack is assumed to be one where the reinforcement tying the floor to a beam, or other structural element, has been yielded. In these zones shear transfer by conventional strut and tie type action is likely to be negligible.

The extent of cracking along an intermediate beam, such as the beam on line C in Figure A-34, depends on the relative magnitudes of inelastic deformation sustained in the perimeter frame, such as the frame on line 1, and an adjacent intermediate frame, such as frame on line 3, in Figure A-34 (a). Where the intermediate frame is flexible compared to the perimeter frame extensive inelastic deformation together with the associated elongation may occur in the perimeter frame with no appreciable inelastic deformation in the intermediate frame. In this situation the wide crack length along a transverse beam, such the beam on line C in Figure A-34 (a), has been predicted to be of the order of 3 times the depth of the perimeter frame beam [SANZ, 2006: Fenwick et al, 2006]. However, where the intermediate frame sustains appreciable inelastic deformation significant elongation occurs on both beams (on lines 1 and 3 in the figure) the crack can be expected to extend for the full length of the internal beam (on line C in the figure).

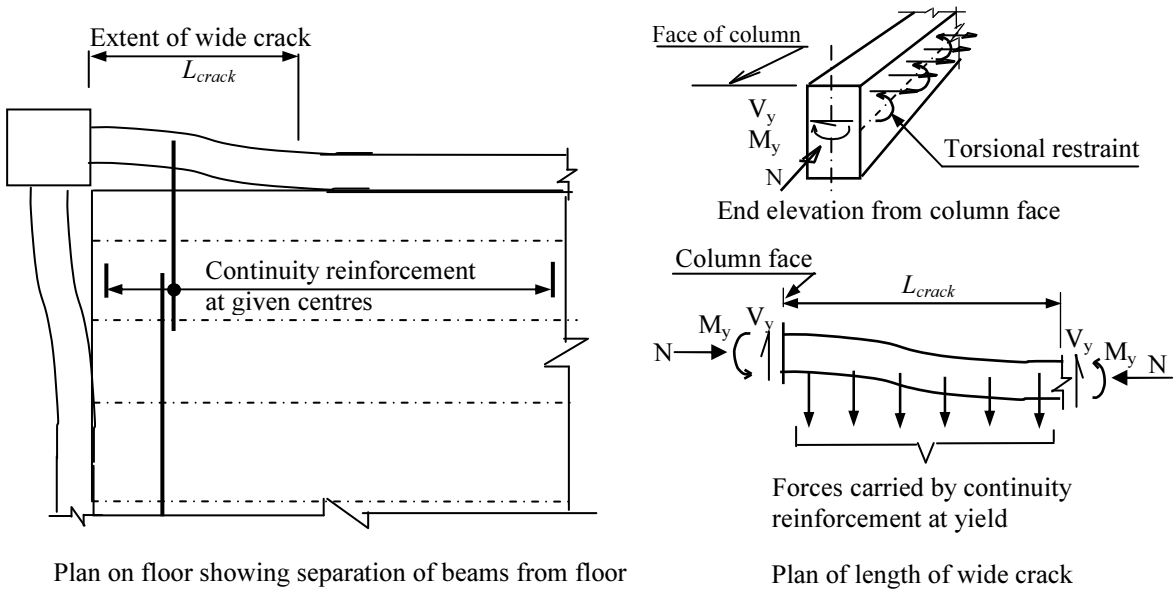

Figure A-35: Separation crack between floor and supporting beams

A9.3 Locations of wide cracks at perimeter frames

The length over which a wide crack may develop between a perimeter beam and an adjacent floor slab can be assessed from the lateral flexural strengths of the beam and the continuity reinforcement tying the floor to the beam. Figure A-35 illustrates the situation. This figure shows the separation of a corner column due to elongation in beams framing into the column. The beams are displaced laterally opening up a wide crack at the interface between the floor slab and beam such that the strain in the reinforcement tying the beam to the floor is in excess of the yield strain. The length of the wide crack is determined by the lateral strength of the beam. If the floor slab is assumed to provide restraint to torsion the critical length, L_{crack}, is given by the equation;

$$L_{crack} = \sqrt{2M_y / f} \qquad \text{(A-7)}$$

Where M_y is the flexural strength of the beam about the vertical axis calculated allowing for axial load and strain hardening of longitudinal reinforcement, and f is the lateral force carried by the continuity reinforcement per unit length, which should be calculated assuming it has a lower characteristic yield stress, f_y. The axial load is equal to the tension force carried by outstanding portion of the effective flange, that is the contribution of slab reinforcement to over-strength of plastic hinge region, as defined in NZS3101: 2006, clause 9.4.1.6.2. The flexural strength should be calculated assuming the longitudinal reinforcement in the beam has an upper characteristic yield strength, which should be further increased to allow for strain hardening. For practical purposes "$2M_y$" may be replaced by "$2.75M_{ny}$" where "M_{ny}" is the nominal flexural strength about the vertical axis. It should be noted that when the equation is applied to an intermediate column, where the precast floor units span past potential plastic hinges, such as column B on line 1 in Figure A-34, the axial load can be high and this can make a very considerable contribution to the flexural strength. In the calculation of M_y it should be assumed that the floor slab provides torsional restraint to the beam as this gives a conservative assessment of the flexural strength and a conservative assessment of length of the wide crack.

A9.4 Diaphragm shear transfer mechanisms from floor lateral force resisting elements

In zones between the wide cracks strut and tie type shear transfer can occur between the floor slab and the floor as illustrated in Figure A-34. Shear transfer can occur across the wide cracks by dowel action of reinforcement connecting the floor to the supporting beams. The shear deformation required to sustain this action is of the order of fractions of a mm. In the limit kinking action of this reinforcement across the crack can also resist shear. However, the shear deformation that must develop across the crack for this action to develop is of the order of magnitude of the bar diameter [Hawkins and Mitchell, 1979, NZCS and NZSEE Study Group, 1999]. Shear displacements of this magnitude could be expected to be incompatible with shear transfer by strut and tie action or dowel action in other locations along the beam.

Reinforcement crossing a wide crack may sustain either axial tension or limited compression stresses. However, the compression stresses that may be sustained are likely to be limited in magnitude due to buckling of the reinforcement. This is associated with the delamination between the insitu and precast concretes in the vicinity of floor supports or boundaries, see test results in Figure A-13 and also see Figure A-14. Where continuity reinforcement is located close to a column some of the tension force carried by this reinforcement induces shear in a boundary beam, such as Beam A in Figure A-34 (b), which in turn is transferred to the column. This force on the column can be balanced by an axial force in a transverse beam, such as Beam B in Figure A-34 (b). This is one mechanism of transferring diaphragm shear forces in a floor into lateral force resisting elements such as frames or walls.

Tests on interaction of floors with moment resisting frames have shown that where an intermediate column in a one way frame, such as column C on line 1 in Figure A-34 (a) and in part (c) of the figure, is adequately tied into the floor it can act as a node for strut and tie forces [Lindsay, 2004; MacPherson, 2005]. However, this situation only applies where there is an adequate linking slab to enable the differential vertical displacement to develop between the floor and beam. Tests have shown

that where there is no linking slab, or an inadequately flexible linking slab, differential vertical displacements destroys the concrete in the floor in the immediate location of the column [Matthews, 2004; and Lau, 2007].

In zones where wide cracks develop reinforcing bars may be strained beyond their safe limit and fracture may occur. The bond performance increases as the diameter of a bar is reduced, consequently smaller bars are likely to fracture at smaller crack widths than larger diameter bars. It is apparent from test results that the fracture strain is significantly reduced by kinking of the bar, which occurs if the hollow-core unit starts to slide off the support ledge [Jensen, 2006].

In structural tests where wide cracks have formed at the interface between a floor and an adjacent structural element appreciable delamination of the insitu topping concrete has been observed, see Figure A-13. This may reduce the ability of bars to transfer stress in lap zones and it may reduce the potential compression force that can be transmitted across the zone.

A9.5 Assessment of critical diaphragm forces

Diaphragm forces on a floor arise from two actions.

1. The floor is required to transmit inertial forces from the gravity loads acting on the floor to the lateral force resisting elements.
2. The floor is also required to transfer shear from one or more lateral force resisting elements to other lateral force resisting elements.

In practice both actions occur in all floors to a greater or lesser extent.

Where a wide crack may be expected to develop across an intended strut, found either from a strut and tie analysis, or from the reinforcement details, the significance of the potential loss of shear transfer should be assessed. Often in analyses floors have been assumed to be rigid elements. Allowing for flexural and shear deformation in a floor can in some cases result in a significant reduction in the diaphragm shear forces. This can be particularly significant where there is a major discontinuity in lateral force resisting elements in the vertical direction of the structure. In such locations a major part of the shear force can arise due to shear transfer between one set of lateral force resisting elements to another set. Allowing for elastic deformation and a limited amount of inelastic deformation can in some cases allow appreciable redistribution of storey shears to occur, which can result in a major decrease in the transfer shear force acting on the critical diaphragm.

Assessing critical forces in floors acting as diaphragms

Appendix B gives a practical method of assessing design actions in diaphragms. The following paragraphs illustrate how redistribution of actions in a transfer diaphragm can be related to the deformation imposed on the diaphragm. Turning this round this enables redistribution to be limited so that only acceptable deformations are imposed on a diaphragm.

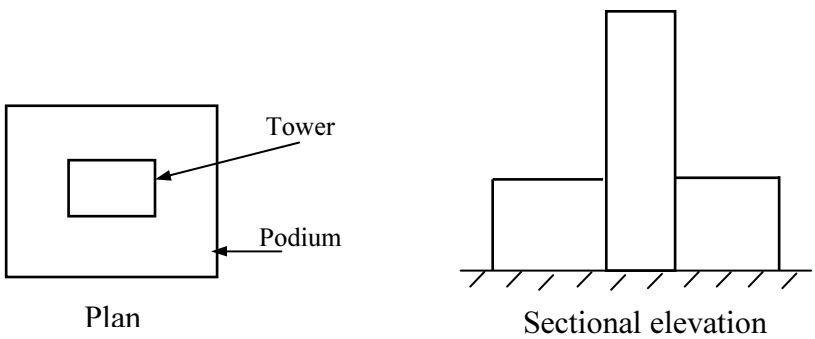

Figure A-36: Podium building

Where there is a change in regularity of a structure with height, high transfer diaphragm forces may be induced. An example of this occurs in podium buildings, such as the one illustrated in Figure A-36. In such structures a major component of the shear resisted by the tower is transferred to the podium structure by the diaphragms near the top of the podium. Figure A-37 illustrates the actions involved when no allowance is made for inelastic deformation of the diaphragms, and when some allowance is made for local inelastic deformation. It should be noted that some initial deformation in diaphragms is likely to be generated by;

- elongation of beams sustaining bending moments;
- due to walls sustaining diagonal cracking associated with shear forces;
- Localised yielding may occur in reinforcement connecting a precast floor to supporting structural elements due to creep, shrinkage and thermal movements in the floor and other structural elements.

Based on an assessment of these actions an acceptable limiting inelastic deformation may be chosen. As illustrated in Figure A-37 (c) the magnitude of deformation imposed on a diaphragm can be assessed from the magnitude of redistributed bending moments. Hence the extent of any redistribution of actions can be related to an acceptable magnitude of deformation of a floor or floors.

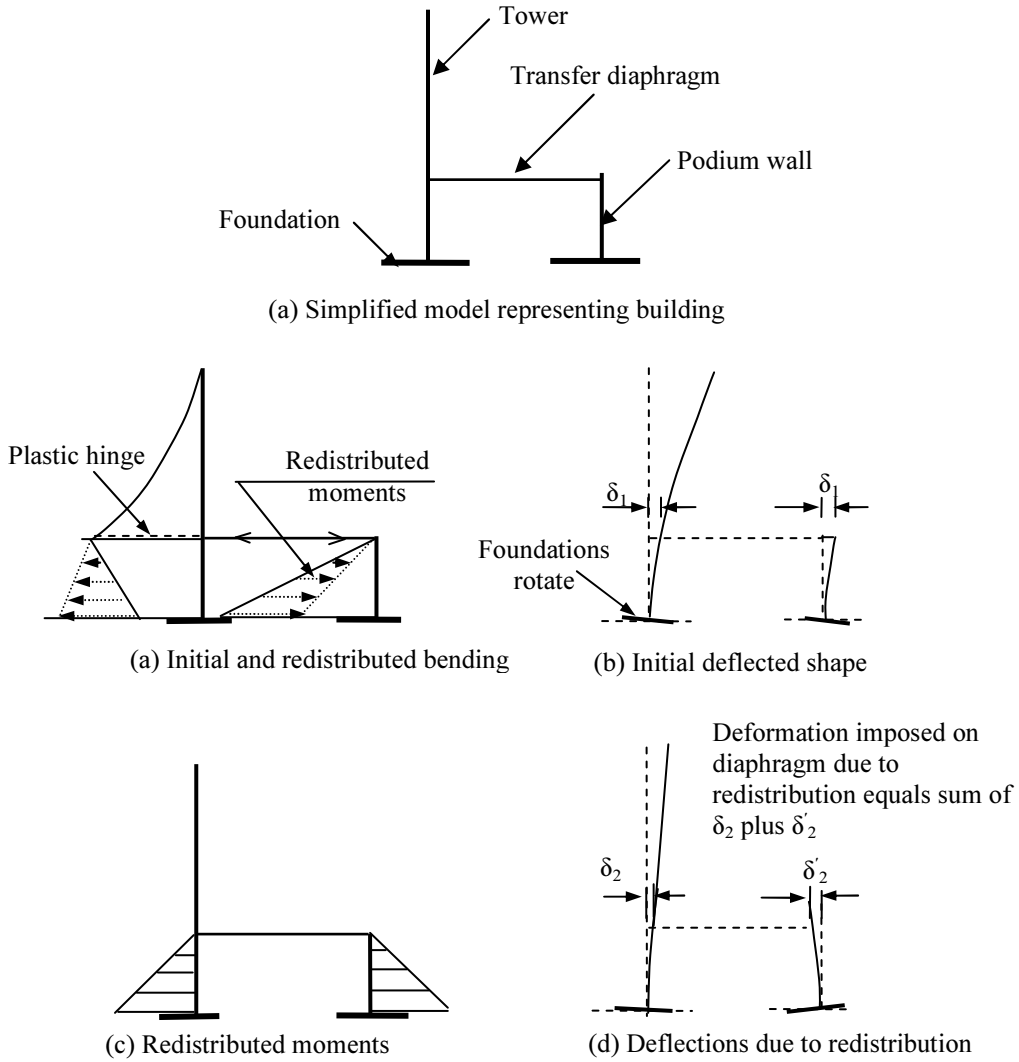

Figure A-37: Redistribution of moments and forces in connection with a transfer diaphragm

References for Appendix A

Broo H, Lundgren K, Engstöm B, 2005. *Shear and Torsion Interaction in Prestressed Hollow-core Units*. Magazine of Concrete Research 57(9): November, pp 521–533.

Broo H, Lundgren K, Engstöm B, 2007. *Shear and Torsion in Hollow-core Units: Finite element analyses of full scale tests*. Structural Concrete 8(2): 87–100.

Bull D, Matthews J, 2003. *Proof of Concept Tests for Hollow-core Floor Unit Connections*. Commercial Report, C2003-1, Civil Engineering, University of Canterbury, New Zealand.

Bull DK, 2005. *Suspended Floors and Diaphragm Action*. In Proceedings, "Precast Concrete Design Seminar", Cement & Concrete Association of NZ and Precast NZ, Wellington, May.

Collins MP, Kuchma D, 1999. *How Safe Are Our Lightly Reinforced Concrete Beams, Slabs and Footing?* ACI Structural Journal 96(4): July–August, pp 482–490.

Collins MP, Mitchell D, 1987. *Prestressed Concrete Basics*. Canadian Prestressed Concrete Institute, Ottawa, Canada.

CEB-FIP, 1990, Comite Euro-international du Beton and Federation Internationale de la Preconstrainte,. *CEB – FIP Model Code 1990 Design Code, 1990*. Thomas Telford, London, 1993, pp 437.

Fenwick R, Bull D, MacPherson C, Lindsay R, 2006. *The Influence of Diaphragms on Strength of Beams*. NZSEE Conference, Napier, March, Paper No. 21.

Fenwick R, Deam B, Bull D, 2004. *Failure Modes for Hollow-core Flooring Units*. SESOC Journal 17(1): April, pp 52–70.

Fenwick RC, Davidson BJ, Lau DBN, 2005. *Interaction Between Ductile RC Perimeter Frames and Floor Slabs Containing Precast Units*. NZSEE Conference, Wairekei, March, Paper No. 23.

Fenwick RC, Davidson BJ, McBride A, 1995. *The Influence of Slabs on Elongation in Ductile Seismic Resistant Frames*. Proceedings NZNSEE Technical Conference on Earthquake Engineering, April, pp 36–43.

Fenwick RC, Fong A, 1979. *Behaviour of Reinforced Concrete Beams under Cyclic Loading*. University of Auckland, Department of Civil Engineering, Research Report No. 176, December, p 49.

Fong, A., 1978, "*Sliding shear in reinforced concrete beams under cyclic loading"*, ME thesis, Department of Civil Engineering, University of Auckland

Forrest, E. J., 2008, *"The Bonding of Concrete to Concrete", SESOC Journal,* Vol. 21, No.1, April, 23-29

FIB Commission 6, 2000. *Special Design Considerations for Precast Prestressed Hollow-core Floors*. Published Federationn internationale du beton, Lausanne, Switzerland.

Goto, Y., 1971, *"Cracks formed in concrete round deformed tension bars"*, ACI Journal, Vol. 68, No.4, 1971, 224-251.

Hawkins, N.M., Mitchell, D., 1979, *"Progressive collapse of plate structures",* ACI Journal, Vol. 76. No. 7, July. 775-808.

Jensen, J., 2006, "*Experimental investigation of Existing Hollow-core sSeatring Connectionspre and post Retrofit",* ME Thesis, Civil and natural Resource Engineering, University of Canterbury

Jensen JP, Bull DK, Pampanin S, 2007. *Experimental Investigation of Existing Hollow-core Seating Connection Seismic Behaviour Pre and Post Retrofit Intervention*. In Proceedings, New Zealand Society for Earthquake Engineering Conference, Palmerston North, New Zealand.

Lau DBN, 2007. *Influence of Precast Prestressed Flooring on Seismic Performance of Reinforced Concrete Perimeter Frame Buildings*. PhD thesis, Civil and Environmental Engineering, University of Auckland, April, pp 368.

Liew HY, 2004. *Performance of Hollow-core Floor Seating Details*. University of Canterbury, Department of Civil Engineering, ME thesis, p139.

Lindsay R, 2004. *Experiments on the Seismic Performance of Hollow-core Floor Systems in Precast Concrete Buildings*. ME thesis, Civil Engineering, University of Canterbury.

Lindsay RA, Mander JB, Bull DK, 2004. *Experiments on the Seismic Performance of Hollow-core Floor Systems in Precast Concrete Buildings*. In Proceedings, 13th World Conference on Earthquake Engineering, Vancouver BC, Canada, 1–6 August, paper 585.

MacPherson C, 2005. *Seismic Performance and Forensic Analysis of Precast Concrete Hollow-core Floor Super-assemblage*. ME thesis, Civil Engineering, University of Canterbury.

MacPherson CJ, Mander JB, Bull DK, 2005. *Reinforced Concrete Seating Details of Hollow-core Floor Systems*. In Proceedings, New Zealand Society for Earthquake Engineering Conference, Wairakei, New Zealand.

Matthews J, 2004. *Hollow-core Floor Slab Performance Following a Severe Earthquake*. PhD thesis, Civil Engineering, University of Canterbury.

NZCS and NZSEE Study Group, 1991, and 1999, *"Guidelines for Structural use of Structural Precast Concrete in Buildings"*, First edition 1991 and Second edition 1999, Centre for Advanced Engineering, University of Canterbury, p143

Peng, Brian, Hsuan-Hsien, July 2009 "Seismic Performance Assessment of reinforced Concrete Buildings with Precast Concrete Floor Systems", PhD Thesis, Dept. of Civil and Natural Resources, Univdrsity of Canterbury, p460.

Priestley, M. J. N., 1998, *Brief Comments on Elastic Flexibility of reinforced Concrete Frames and Significance to Seismic Design",* Bulletin of the NZ National Society for Earthquake Engineering, Vol. 31, No.4, pp246-259

Priestley M J N. Seible, F, and Calvi, G M, *"Seismic design and retrofit of Bridges",* Published John Wiley and Sons*,* 1996, page 308

Priestley, M. J. N. and Kowalsky, M. J., 1998, *Aspects of Drift and Ductility Capacity of Rectangular Walls,* Bulletin of the NZ National Society for Earthquake Engineering, Vol. 31, No.2, pp73-85

Qi, X. and Panatazopoulou, S. J., "*Response of RC Frame under Lateral Loads"* Journal of Structural Rngineering, ASCE, Vol.87, No. 4, pp406-415

Restrepo JI, Rodregios M, Saunders D, 2000–4. *Earthquake Resistant Precast Concrete Buildings: Wall-slab coupling effects in low-rise buildings*. University of Canterbury, Civil Engineering research report.

Restrepo-Posada JI, 1993. *Seismic Behaviour of Connections Between Precast Concrete Elements*. University of Canterbury, Department of Civil Engineering Research Report, No. 93-3, p 385.

SANZ 2006. *Concrete Structures Standard, NZS 3101-2006, including amendments 1 and 2 (2008)*. Standards New Zealand.

SANZ, 2004; *Earthquake Actions Standard, NZS1170.5,* Standards New Zealand

Woods L, 2008. *Significance of Negative Bending Moments in the Seismic Performance of Hollow-core Flooring*. ME thesis, Civil and Natural Resources Engineering, University of Canterbury.

Appendix B
Recommendations for Determining Seismic forces in Diaphragms

In this Appendix the following aspects are discussed:-

- General requirements for diaphragms;
- Factors which should be considered in modelling diaphragms;
- Methods of assessing diaphragm actions in diaphragms (ESA and pESA).

B1.0 General

Floors and roofs acting as diaphragms should be considered as parts of the primary lateral force resisting system.

In terms of the "Parts and Components", Cl. 8.1.1: NZS 1170.5 [SNZ, 2004], diaphragms are NOT to be treated as "parts". The manner of determining forces in a diaphragm as being a "part" was suggested by NZS 4203:1992 and has been revised in NZS 1170.5: 2004.

Vertical structural systems, both primary and secondary structures, induce forces across diaphragms – this is particularly true of today's architecture where the floor plates and penetrations through the floors are relatively complex; when compared to those of the 1970s and 1980s.

There is an incorrect and commonly held view that "transfer" diaphragms are only those that occur at podium roofs and the like, and that transfer diaphragms and inertia diaphragms are separate entities. "Transfer" diaphragms forces are those that result from tying together, the vertical lateral force resisting structures (buildings with frames of different stiffness and strengths and buildings with a mixture of systems, e.g. walls and frames). Each and every diaphragm has some degree of "transfer" function.

Inertia and transfer effects are "coupled" - i.e. inertia causes the building to deform and it is the incompatibility of deformed shapes of each vertical structural system that generates the transfer forces across the diaphragms [Bull, 2004].

B2.0 Requirements of NZS 1170.5 for Diaphragm Design

The following bullet point items are summaries of the clauses from NZS 1170.5 and comments are made in terms of interpretation of these requirements.

Cl. 6.1.4.1 *Requirement for modelling*

- For structures over 15 m in height where the structures are **irregular** in terms of Cl. 4.5, then the diaphragm shall be modelled as 3-dimensional modal response spectrum or 3-dimensional numerical integration time history.

Comment: This particular clause has no actual Commentary within the Standard. This modelling requirement does NOT help with the determination of the forces through diaphragms.

This clause is about generating maxima of actions in the vertical lateral force resisting system of the structure.

The 15 m height is an inclusion from earlier Standards, where it was believed shorter buildings did not have issues with forces in diaphragms. This assumption may be unconservative. The complicated architect of many of our shorter buildings can result in complex load paths across the diaphragms. All structures should be viewed in a similar way for diaphragm design.

- Where the diaphragm is deemed to be flexible, this shall be modelled.

Comment: The definition of "flexible" is found in NZS 1170.5: Appendix A: Definitions.

"**Flexible diaphragm:** A diaphragm is sufficiently flexible when the maximum lateral deformation is more than twice the average inter-storey deflection at that level."

Other references include the "Precast Guidelines" 1999, CAE.

Diaphragms should be kept elastic and modelled this way.

- Inelastic deformations through in-plane actions in diaphragms require "rational analysis" substantiated by experimental data.

Comment: inelastic deformations should be avoided. It is very difficult to model inelastic behaviour in diaphragms. This behaviour can lead to very poor behaviour of precast floors, including possible collapse.

However, see the comments below – localised inelasticity in a diaphragm such as around columns, next to beam plastic hinges, is acceptable if the forces through the diaphragm can be sustained and the diaphragm is still performing, as a whole, as an essentially elastic element.

Cl. 6.1.4.2 ***Actions for design of diaphragms***

- Actions to be used in the design of diaphragms shall be the sum of actions from the 2-D and 3-D analysis, plus the actions derived from considering how the inertia of the diaphragm elements are distributed to the lateral force resisting structural elements.

Comment: the "3-D analysis" in the first sentence implies the modal analysis cited in Cl. 6.1.4.1 – however, the modal analysis that produce maxima of one sign, do NOT help here. The use of elastic times history analysis or modal analysis that output envelopes of maxima actions will not provide relevant information for detailing the load paths across diaphragms and in to vertical structures. These maxima do not provide actions that occur together at anyone point in time, and therefore are not in equilibrium, nor produce a vector sense for the action. The designer is interested in floor forces in a real time context and as vectors.

What should be inferred is that anything other than short rectangular, regular buildings requires 3-D assessment so that all the interactions of the vertical structural systems are accounted for.

- Actions within the diaphragms shall account for higher mode effects and influence of overstrength actions (in accordance with Clause 5.6.3.3), generated from within the structure as a whole.

Comment: the clause above opens the way to use the recommendations that follow.

The research and calibration of the recommended method described below (the "pseudo-Equivalent Static Analysis"- pESA), accounts for the overstrength actions generated in the buildings and for the dynamic higher mode effects. Therefore, no amplifying factor needs to be applied to the outcomes of the pESA for higher mode effects.

C6.1.4 Diaphragm Response

Comment: What follows is, for the most part, the text of the Commentary to 6.1.4.2, NZS 1170: 2004 . It is included here as the justification for the Code requirements. Additional material is provided in order to meet the requirements of 6.1.4.2.

"The design of diaphragms is a complex matter. Considerable judgement is needed in the analysis and detailing of diaphragms. Simple "deep beam" theory may not be appropriate for floor plates, including roofs, that have re-entrant corners and penetrations, in resisting seismic events as the traditional use of beams as tension chords may be unfounded as these beams are active in frame action during the event [Bull, 2004, CCANZ-Precast NZ 2005].

One approach is to undertake three dimensional non-linear time history analysis of all the structure within a building (diaphragms, primary lateral load resisting systems and the secondary vertical structures as these can add transfer effects in to the diaphragm actions). The same issues, as for modal spectrum analysis, of the maxima of actions not coinciding in time, make interpretation of the outputs from a NLTH very difficult in terms of diaphragm design.

It is inappropriate to attempt a separate analysis of the inertia effects and transfer effects. The transfer actions and the inertias are coupled analytically – that is, inertia causes the building to deform and it is the incompatibility of deformed shapes of each vertical structural system that generates the transfer forces across the diaphragms. These actions occur together.

Designing floor plates with the strut and tie solution [Bull, 2004, CCANZ-Precast NZ 2005], described sometimes as an "equivalent truss method", deals with the geometries that are variable in architecture and simplifies the determination of load paths across diaphragms and into vertical structural systems. **It is recommended that diaphragms be designed using strut and tie solutions."**

Comment: this recommendation for use of Strut and Tie has resulted in NZS3101:2006 using "Strut & Tie" as the only recommended solution for designing diaphragms.

Continuing with the quote from NZS 1170.5: 2004 and the pseudo-Equivalent Static Analysis (pESA)

"For determining the actions in the structure it has been suggested [Bull, 2004] and references cited therein, that the actions for the structure should be based on capacity design principles. In order to visualise the load paths through the structure, in any design method, it is imperative that equilibrium is maintained across diaphragms, accounting for the interaction of the vertical structure systems via the diaphragms and distribution of the inertia across the floor plates. It is suggested that a **pseudo-Equivalent Static Analysis** (***pESA***) may be employed, with the floor forces (the inertia of each floor, in effect) factored up by the [overall] building overstrength factor…"

Comment: See below.

- Overall building overstrength factor , ϕ_{ob}

"Building lateral overstrength should account for full plastic mechanism development in the components of the structure, as designed, divided by the demand earthquake event, determined from *the Loadings Standard being used*).

The minimum ϕ_{ob} should generally be in the range of 2.0-2.5."

However, depending on how the actual strength is provided to the mechanism ϕ_{ob} could be as high as 4.0.

Consider when determining ϕ_{ob} :

- *The plastic mechanism for the structure needs to be envisaged.*
- *This should account from the likelihood of some of the PHZ not forming. For example using that R_v factor in NZS 3101. In effect, it is a rudimentary "push over analysis".*

Overall building overstrength factor, ϕ_{ob}, can be:

$$\phi_{ob} = \frac{M_{ob}}{M_E} \quad \text{or} \quad \phi_{ob} = \frac{V_{ob}}{V_E}$$

where M_{ob} *is the overturning moment of resistance at overstrength (this includes the restoring component from gravity).*

V_{ob} *is the lateral shear associated with* M_{ob}.

M_E *is the moment demand from an un-amplified Equivalent Static Analysis based on the response spectrum assumed from the Loadings Standard.*

V_E *is the base shear associated with* M_E.

The pseudo-Equivalent Static Analysis - pESA

Using a pseudo-Equivalent Static Analysis (*pESA*), the magnitudes and directions of the applied forces at the boundary of the diaphragm are known and are in equilibrium.

The coarseness of *pESA* is somewhat mitigated, if the TIES across the diaphragms are connected correctly into the vertical structures (the "nodes" of a strut and tie solution).

When looking at the both the whole building and individual floors, there are short comings with traditional approaches, with reference to Figure B-1:

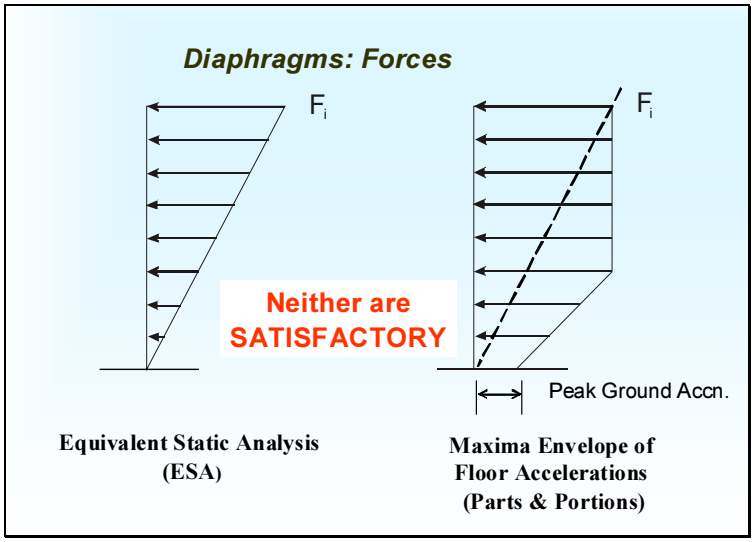

Figure B-1: Equivalent Static Analysis & Maxima Envelope [CCANZ-Precast NZ, 2005]

- The traditional *ESA* underestimates the inertia forces at lower levels.
- The maxima envelope of the "Parts and Portions" approach (NZS 4203 and 1170.5) overestimate the floor inertia and deflection of the building. This in turn overestimates the "transfer" effects that are driven by lateral displacements of the structure [Gardiner, 2006, 2008].

In response to the recommendations of the Commentary of NZS 1170.5, the *pESA* was visualised, and is recommended as the approach to determine the forces in diaphragms:

At the **overstrength of the building**, the recommended floor forces result in (refer to Figure B-2);

- About right deformed shape:

  Therefore "transfer" forces are OK.
- Approximately, the correct amplified inertias in the upper floors.

- Peak Ground Acceleration (PGA): inertias that are approximately correct in the lower floors; this has little effect on the deformed shape, and hence little effect on transfer forces.

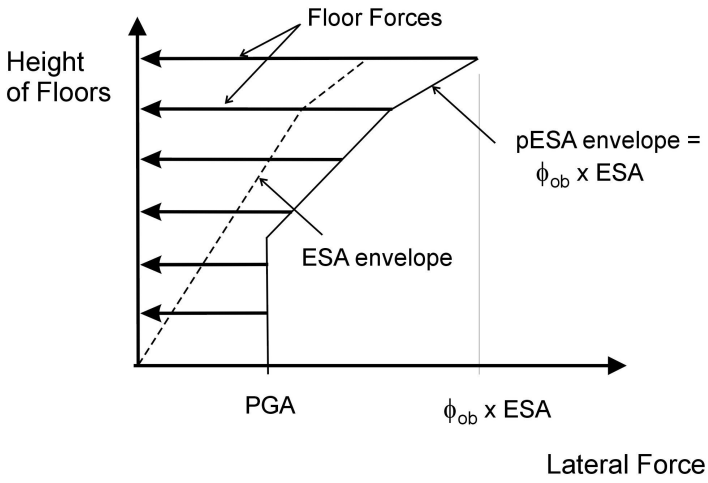

Figure B-2 Static forces for *ESA* and *pESA* envelopes [Gardiner et al, 2008]

- The line of action for the floor forces can be taken through the centre of mass of each floor. The NZS 1170.5 requirement of adjusting the application point of the floor force by *0.1 B*, where *B* is the width of the building perpendicular to the line of actions, need not be considered.
- The Strength Reduction Factor, ϕ, is equal to 1, as the actions generated in the building are based on overstrength floor forces.
- First mode output from a modal analysis can be used in the same way as an equivalent Static Analysis, amplified as above , with:

M_E is the moment demand from 1st mode, based on the response spectrum assumed from the Loadings Standard.

V_E is the base shear associated with M_E.

Verification of the *pESA* was done in both a report by Gardiner as part of her Bachelor of Engineering studies and further studies as part of a PhD undertaken by Gardiner, nearing completion, at the University of Canterbury.

An Elastic Diaphragm – localised damaged can be OK.

Diaphragms that respond "elastically" can be visualised as having virtually no plastic deformation within the body of the diaphragm during seismic action, while possibly accepting permanent deformation (e.g. some plasticity or sliding) on the boundaries of the diaphragm.

This permanent deformation/plasticity on the diaphragm boundaries can be sustained in the connections and support details for the floor plate and may extend in to the diaphragm a nominal distance or by a specifically detailed element to accommodate plasticity (e.g. cast in place reinforced concrete infill strip between beams of the frame and precast concrete floor units or nail plates along the edge of a timber diaphragm).

In terms of "having virtually no plastic deformation within the body of the diaphragm", this means that localised plasticity in the body of the plate may be permitted, providing:

- It is transitory, not being relied upon for redistribution of actions nor energy dissipation.
- Localised plasticity does not negate the outcomes of the analysis of the structure, based on the assumption of modelling the diaphragm as an elastic element.
- Localised plasticity does not compromise the gravity supporting role of the floor plate nor the transfer of forces through the diaphragms.

References for Appendix B

Bull, D.K., 2004. *Understanding the Complexities of designing Diaphragms in Buildings for Earthquakes*, Bulletin of NZ Society for Earthquake Engineering, Vol. 37, No. 2, June 2004.

CAE, 1999. *Guidelines for the use of structural precast concrete in buildings*. NZ Concrete Soc. & NZ Nat. Soc. for Earthquake Engineering, Centre for Advanced Engineering, 2d ed., 1999: 174p.

CCANZ-Precast NZ, 2005. *Precast Concrete Design Seminar*, 2005. Cement & Concrete Association of NZ & Precast NZ, May 2005.

Gardiner, D.R., 2006, *Verification the Pseudo-Static Analysis Method,* 3rd Pro Report, Department of Civil and Natural Resource Engineering, University of Canterbury, 2006.

Gardiner, D.R., Bull, D.K. & Carr, A., 2008. *Investigation of the Magnitude of Inertial and Transfer Forces in Floor Diaphragms during Seismic Shaking*", in *Proceedings,* the 14th World Conference on Earthquake Engineering, Beijing, China, 2008.

SNZ, 2004. NZS1170.5, Structural Design Actions Part 5: Earthquake actions, & Commentary, Standards New Zealand, Wellington, New Zealand