CONFIDENTIAL

Operations Manual for Prototype B

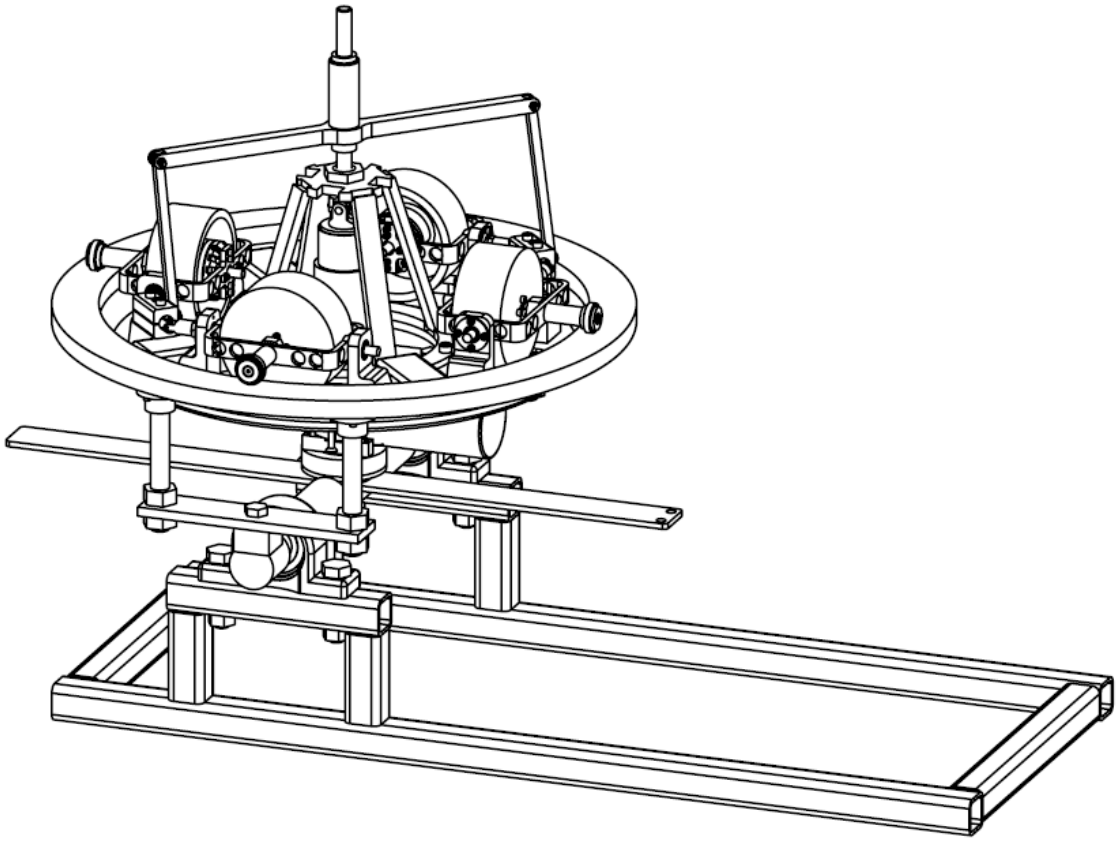

Written by Ben Redwood

For use by Technix Industries Limited

Table of Contents

Section 1: Introduction 1

Section 2: Assembly of Overall System 2

Section 2.1 Tools required 3

Section 2.2 Assembly procedure 3

Section 2.3 Conclusion of Prototype B assembly 12

Section 3: Assembly of Prototype B Sub-systems 13

Section 3.1 Tools required 13

Section 3.2 Gyroscopes 14

Section 3.2 Disc 16

Section 3.3 External structure 18

Section 3.4 Disc drive mechanism 20

Section 3.5 Gimbal frame linkage 22

Section 3.6 Central pivot 24

Section 3.7 Conclusion of sub-systems assembly 25

Section 4: Operational Procedure for Prototype B 26

Section 4.1 Power supplies and associated components 26

Section 4.2 Flywheel motor power arrangement 28

Section 4.3 Disc precession motor power arrangement 29

Section 4.4 Operation of Prototype B 31

Section 4.5 Conclusions of operational procedure 32

Section 5: Safety 33

Section 1: Introduction

Prototype B is a gyroscopically stabilized platform designed, manufactured and tested by Ben Redwood as part of a PhD in Mechanical Engineering at the University of Canterbury, funded by Technix Industries Limited.

The purpose of this manual is to show the assembly methods for constructing Prototype B and the operational procedures required to achieve oscillatory stabilizing behaviour.

This manual will cover:

- The procedure required to assemble each of the 6 sub-systems that comprise Prototype B together to form the overall gyroscopically stabilized platform.
- A bill of materials and assembly drawings of each of the individual sub-systems of Prototype B.
- The connections and arrangement of the power systems that drive Prototype B and the procedures that must be followed to operate it.
- The critical safety issues that must be addressed when assembling and operating Prototype B.

Section 2: Assembly of Overall System

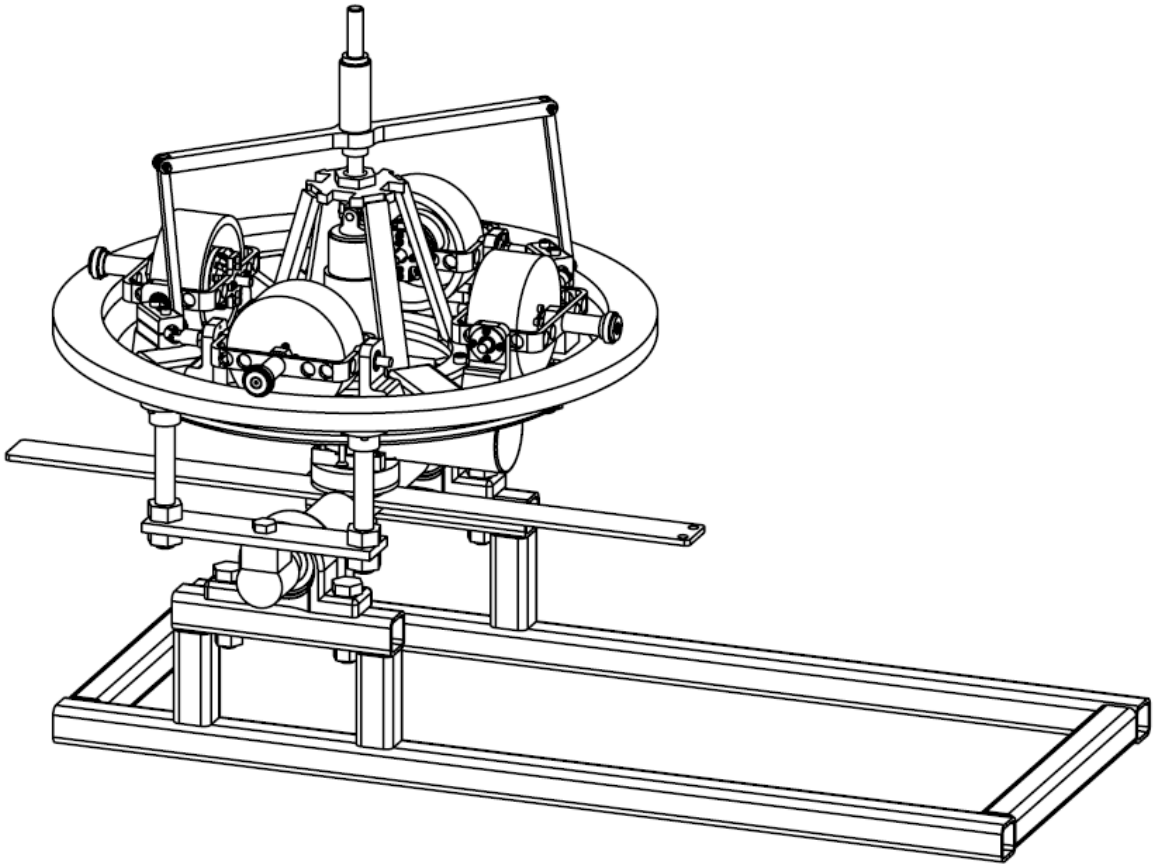

Figure 2.1 – Prototype B (SP1-01-001)

This section presents how to assemble each of the 6 subsystems that comprise Prototype B to form the overall gyroscopically stabilized platform. The assembly of each of the 6 sub-systems is shown in Section 3 of this manual. The 6 sub-systems and their associated part numbers that Prototype B consists of are:

i) External structure (SP2-03-001)
ii) Disc Drive Mechanism (SP2-04-001)
iii) Central Pivot (SP2-06-001)
iv) Disc (SP2-02-001)
v) Gyroscopes (SP2-01-001)
vi) Gimbal Frame Linkage (SP2-05-001)

Section 2.1 Tools required

The following tools are needed for the assembly of Prototype B:

- Adjustable spanners to suit M10 – M40 bolts and nuts
- Allen keys to suit M4, M5, M6, and M8 cap screws
- 10m ring spanner
- Rubber mallet

Section 2.2 Assembly procedure

This section will assume that Prototype B will be assembled on a flat and level surface.

Step 1 – *Securing external structure frame*

Ensure the external structure mounting fame (SP2-03-009) is firmly secured to the floor. This will aid in reducing vibrations and significantly reduce the noise of the system during operation.

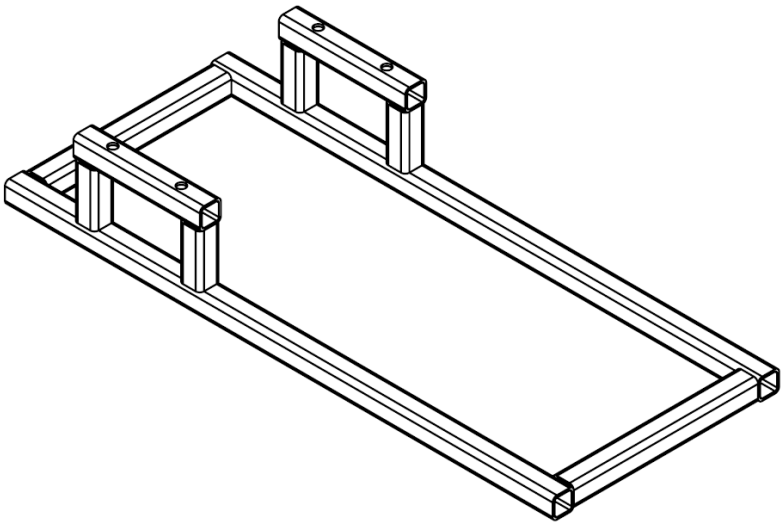

Figure 2.2 - External structure mount frame

Step 2 – *Attaching external structure to external structure frame*

Attach the external structure to the mount frame via four M16 x 75mm bolts, four M16 nuts and the two Ø35mm pillow blocks on the external structure tilt shaft (SP2-03-002). The mount holes of the pillow blocks align with the four holes drilled in the external structure mount frame (Figure 2.3).

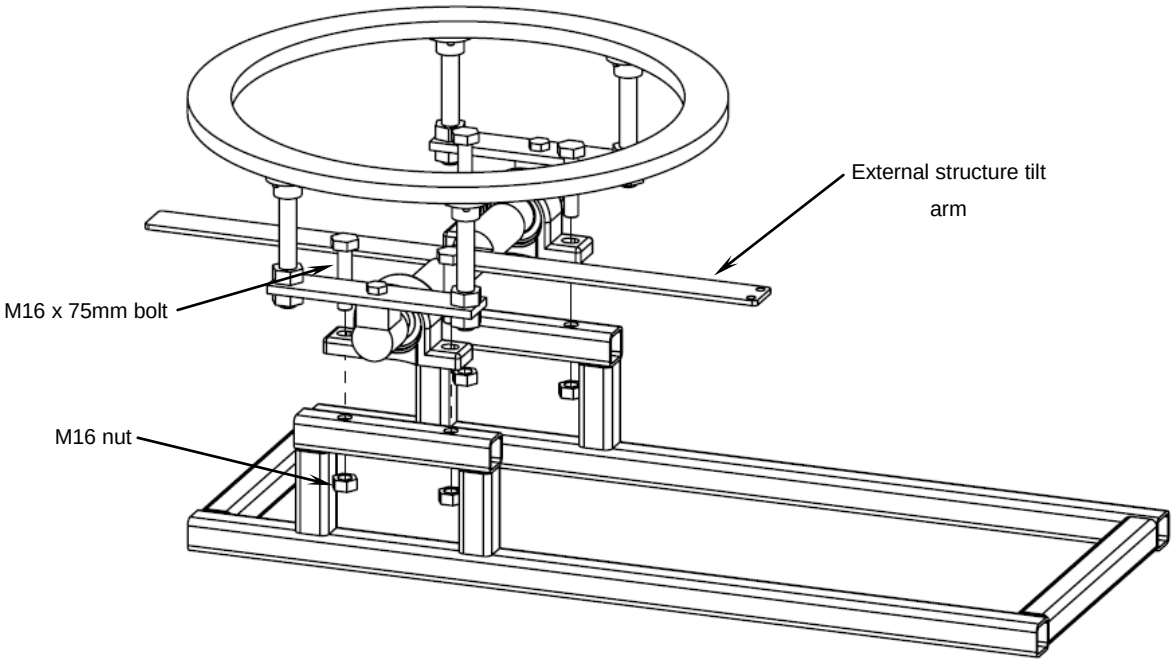

Figure 2.3 – External structure attaching to mount frame

The holes in the mount frame are slotted to aid in assembly. It is important that the external structure tilt frame shaft (SP2-03-002) is square relative to the mount frame. This will ensure more accurate readings when measuring the magnitude of the moment produced by Prototype B. Note that the external structure tilt arm (SP2-03-008) is currently not connected to the external structure. The assembly of the disc drive mechanism will ensure it is secured in place.

Step 3 – *Attaching disc drive mechanism to external structure*

Align the M20 bottom threaded structure connection (SP2-04-002) at the bottom of the disc drive mechanism with the M20 threaded hole in the centre of the external structure tilt shaft (SP2-03-002). It is critical that the external structures tilt arm (Figure 2.4) is perpendicular to the tilt frame shaft. This should be checked with a square before fully securing the disc dive mechanism in position.

It is safe to use the 24V DC drive motor (SP2-04-013) to gain more leverage when tightening down the drive mechanism to the external structure.

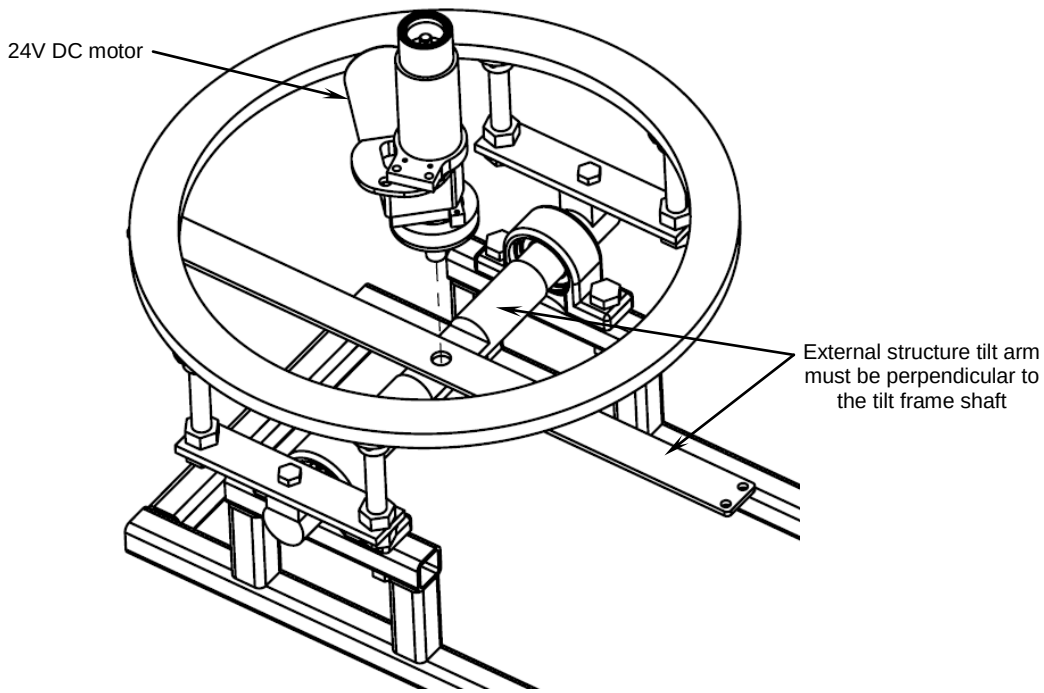

Figure 2.4 – Securing the disc drive mechanism to the external structure

Step 4 – *Attaching central pivot to disc drive mechanism*

The central pivot (SP2-06-001) can now be attached to the disc drive mechanism. An M12 threaded section of the main drive shaft (SP2-04-010) can be seen protruding from the top of the disc drive mechanism between two bearings. This threaded shaft section is used to secure the central pivot to the disc drive mechanism.

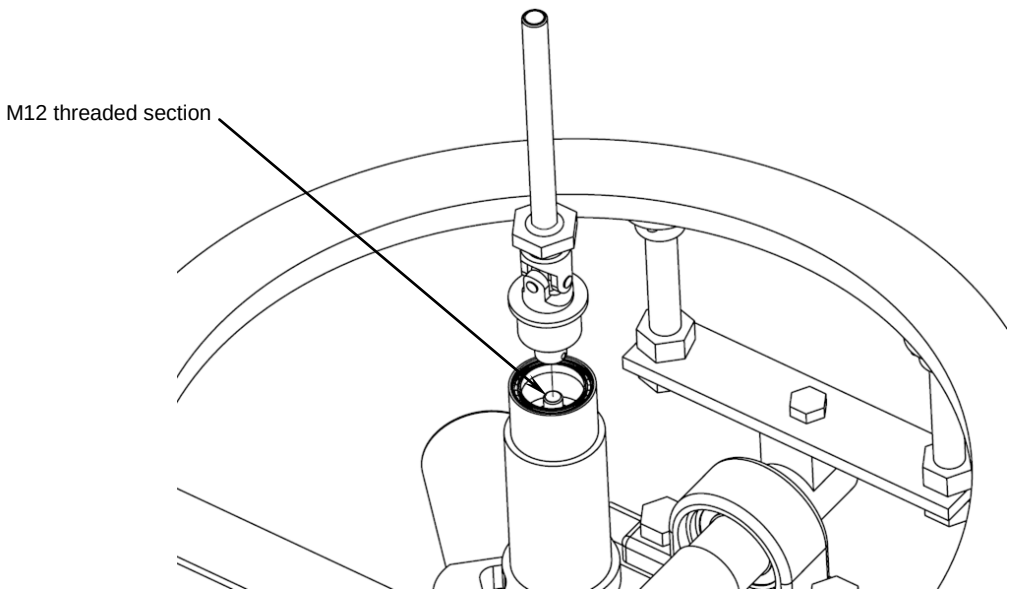

Figure 2.5 – Central pivot attaching to disc drive mechanism

The universal joint coupling (SP2-06-002) has been machined to a high tolerance to aid in the assembly of it with the 2 bearings. The central pivot assembly should be wound down upon the disc drive mechanism drive shaft as far as it will go. It is safe to tighten the thread by using the universal joint (SP2-06-004) for leverage ***(a force should not be applied to the main shaft (SP2-06-003) to tighten this connection).***

Step 5 – *Securing gyroscope assemblies to disc*

The gyroscope assemblies (SP2-01-001) are assembled onto the disc (SP2-02-001) (Note that this is a separate assembly that will be assembled into the overall system later).

The top of the disc has a large number of holes to suit sixteen Ø4mm dowel pins and sixteen Ø6mm clearance holes for M6 cap screws. These correlate to holes found in the bottom of the gyroscope assemblies mount legs (SP2-01-010 & SP2-01-011) (Figure 2.6).

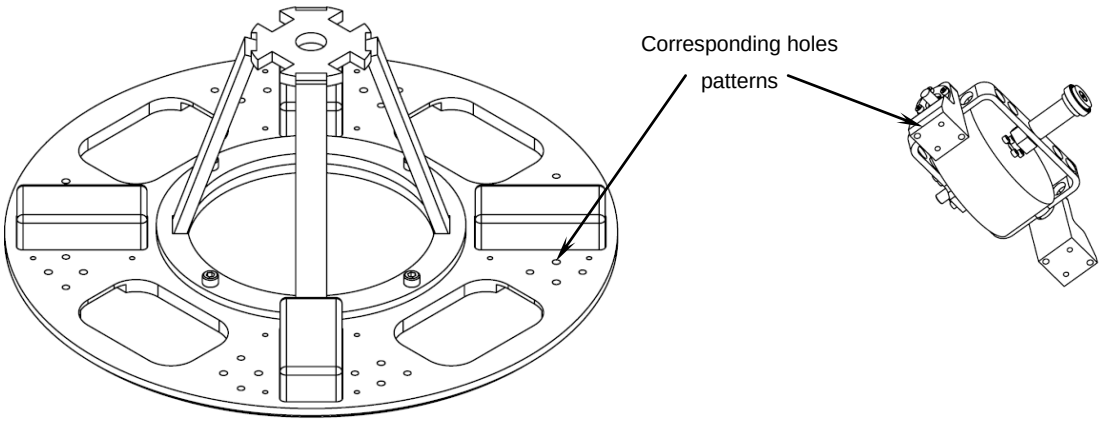

Figure 2.6 – Disc and gyroscopes mount hole patterns

The gyroscopes are secured to the disc by two M6 x 20mm cap screws and two 4mm dowel pins ***per leg***. The dowel pins are first placed in the gyroscope mount legs and aligned with the corresponding holes in the disc. The cap screws are then inserted from the bottom of the disc up into the corresponding threaded hole of the gyroscope mount legs and tightened, securing the gyroscopes in place (Figure 2.7).

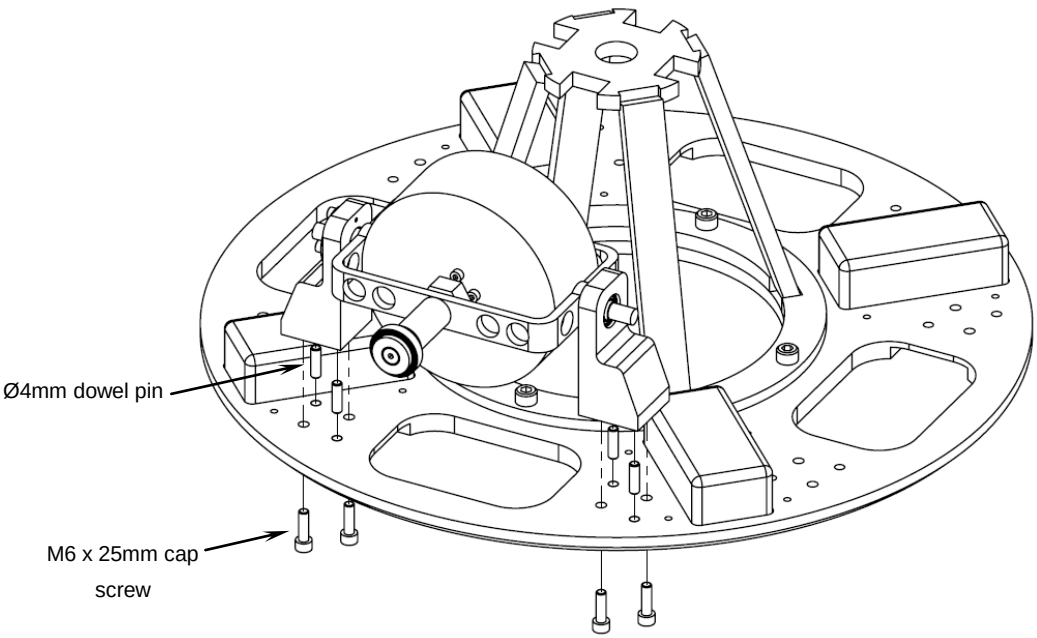

Figure 2.7 – Gyroscope assembled onto disc

The above step will need to be repeated for all four of the gyroscope assemblies.

Step 6 – *Attaching disc/gyroscope assembly to central pivot*

Once the gyroscopes are secured in place upon the disc the whole disc/gyroscopes assembly must be assembled into the overall system.

The M24 half nut attached to the central pivot assembly (SP2-06-001) must first be removed (Figure 2.8). This is used to tighten down upon the disc assembly securing it to the top of the universal joint shoulder (Figure 2.9).

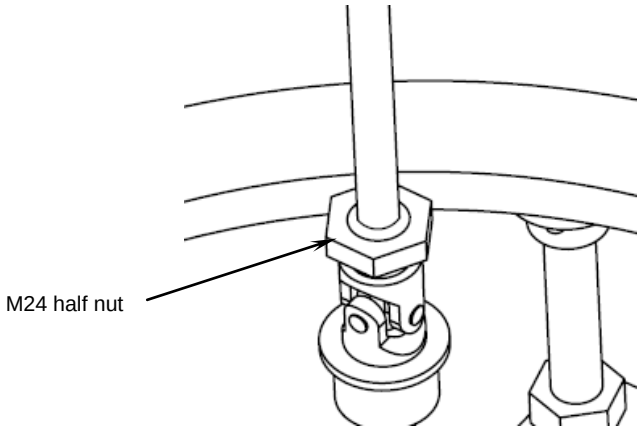

Figure 2.8 – M24 nut used to secure disc/gyro assembly

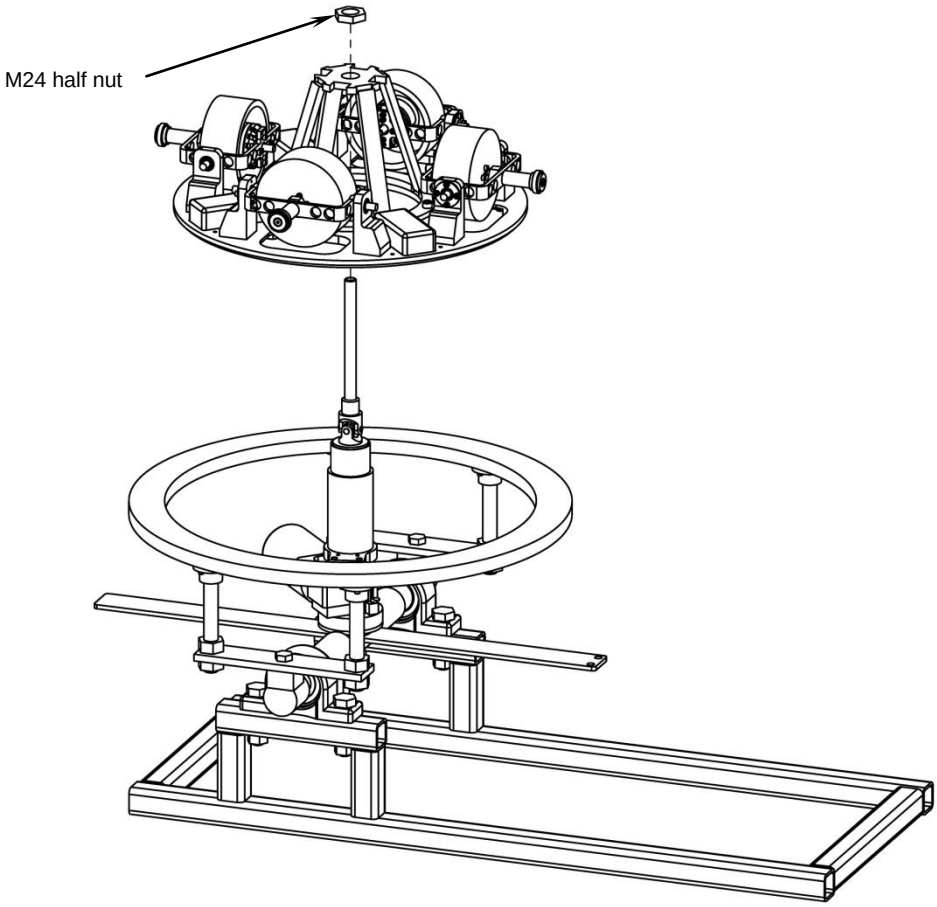

Figure 2.9 – Disc/gyro assembly secured to central pivot

This is one of the more complicated steps in the assembly of Prototype B and it is recommended that one person holds the central pivot main shaft (SP2-06-003) upright as another person lowers the disc/gyroscopes assembly over the shaft until it rests on the universal joint shoulder. The M24 half nut is then slid over the central pivot main shaft and tightened down as tight as possible securing the disc/gyroscopes assembly to the rest of the system.

Step 7 – *Attaching gimbal frame linkage to gyroscope gimbal frame*

The next step in the assembly of Prototype B involves attaching the gimbal frame connection (SP2-05-001) to the gimbal frame shafts (SP2-01-002). This process is completed in several steps.

Firstly, the machined universal joints (SP2-05-008) are screwed onto the gimbal frame shafts (SP2-01-004). The joints have been machined so that once they are 10mm from the end of the gimbal frame legs (SP2-01-010 & SP2-01-011) the slot machined in them is vertical (Figure 2.10). An M10 half nut is then tightened up against the universal joints to lock them in position. This step is repeated on the opposite side of the assembly for the other diametrically opposite gyroscope pair.

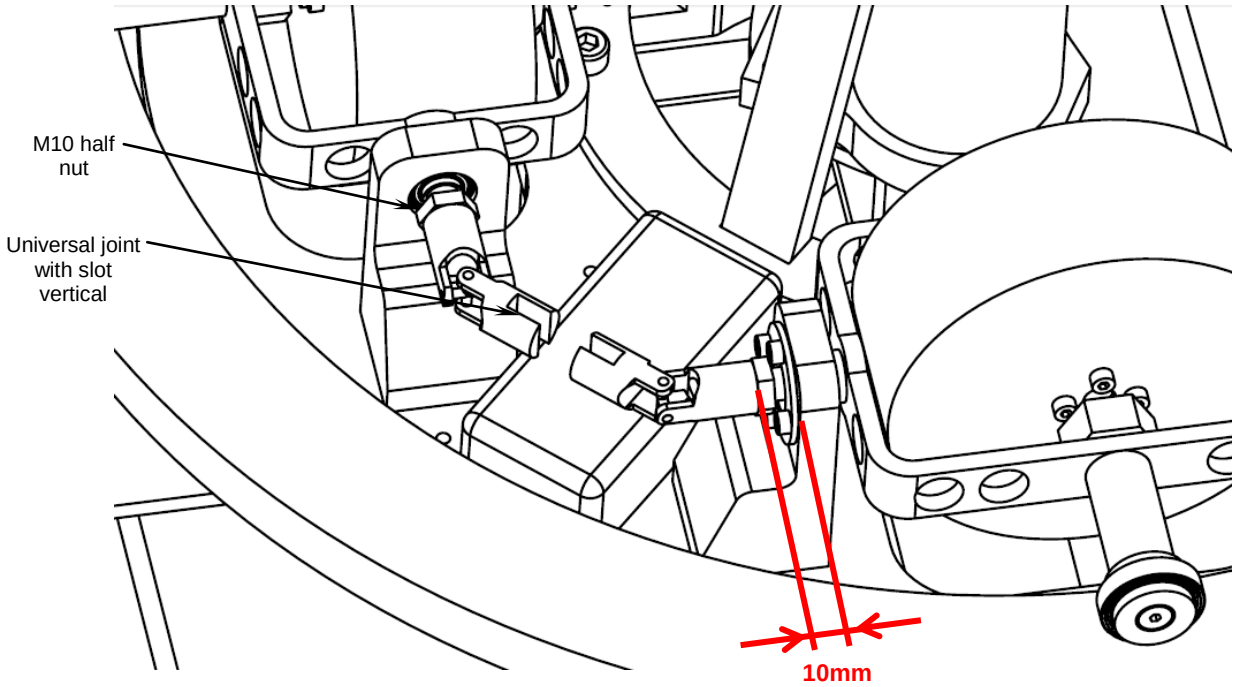

Figure 2.10 – Location of universal joints on gimbal frame shafts

Once the universal joints have been correctly positioned and locked in place the universal joint clamping coupling (SP2-05-007) is placed over the top (Figure 2.11) Again, this next step is repeated on both sides of the assembly.

The clamp consist of two sections; a top section that connects to the gimbal frame linkage connecting arm (SP2-05-006); and a bottom section that contains two tapped M6 holes that secure the top and bottom sections together.

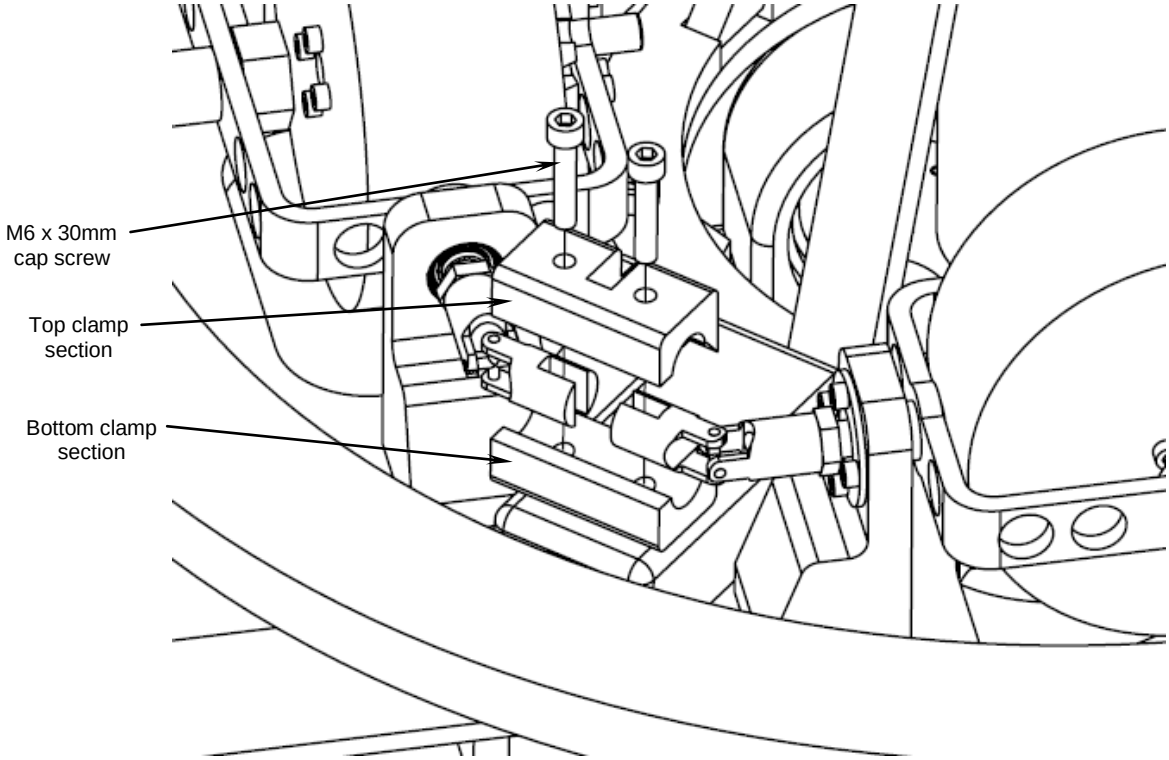

Figure 2.11 - Universal joint clamping coupling

The bottom section is held in place under the universal joint and the top section is placed over the top of the universal joint. Two M6 x 30mm cap screws are then used to clamp the two sections together (while also passing through the universal joint vertical slots, aligning them with the clamping sections). ***It is critical that one of the universal joint clamping couplings points away from the centre of the system, and one points to the centre*** (to match the diametrically opposite pairing of the gyroscopes). The example shown in Figure 2.11 demonstrates a clamping coupling pointing towards the centre of system. See Figure 2.13 for the example of an assembled clamping coupling pointing away from the centre of the system.

The overhead liner slide assembly (SP2-05-002) is now slid over the central pivot main shaft (SP2-06-003) as shown in Figure 2.12. Smooth motion of the linear slide assembly over the main shaft with no pinching or interference should occur. It is recommended this motion is checked before proceeding as any resistance or interference will have a large impact on the performance of the system during the stabilization process.

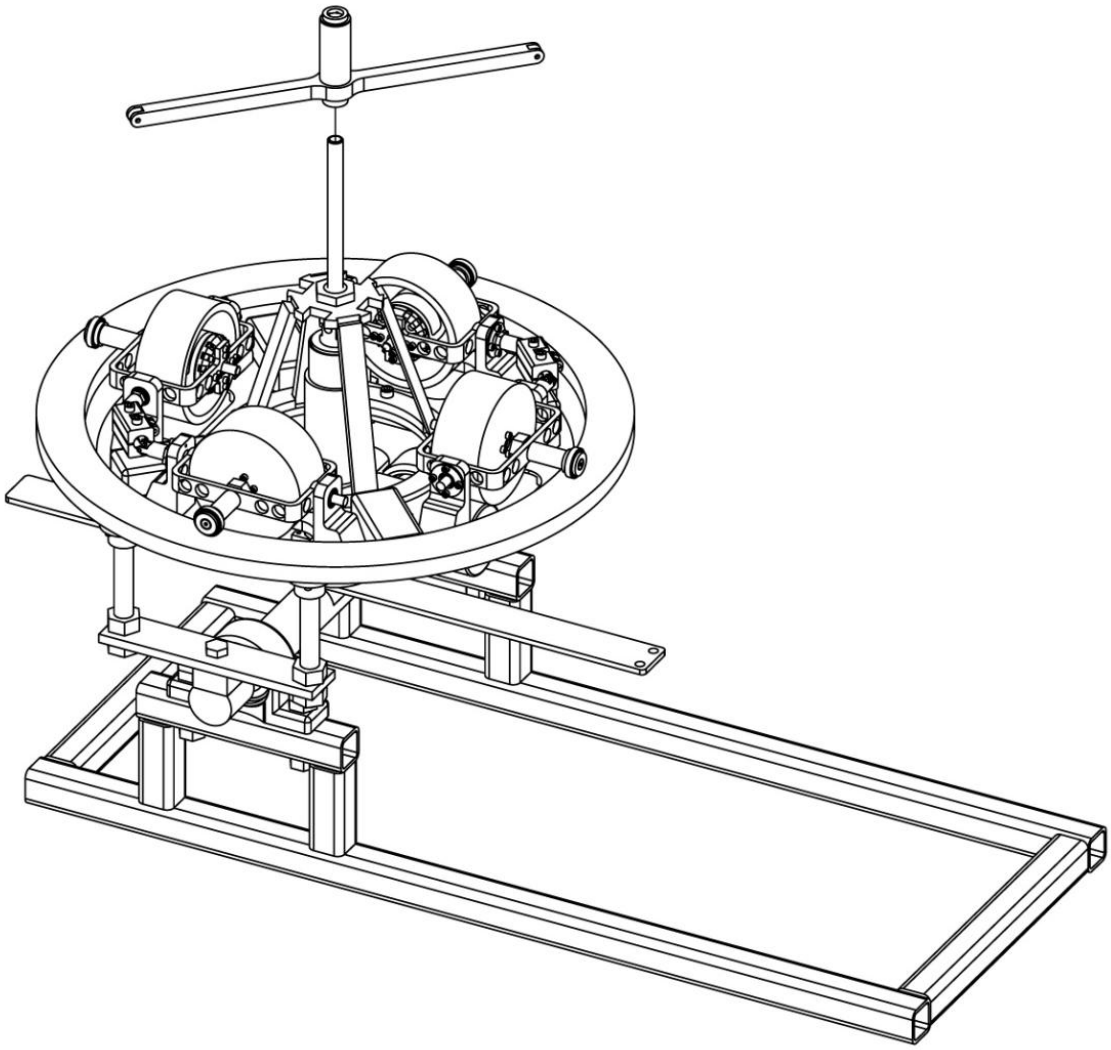

Figure 2.12 – Linear slide assembly into overall system

The final stage in the assembly of Prototype B is the attachment of the gimbal frame linkage connecting arms (SP2-05-006). The arms connect to the linear slide assembly and the universal joint clamping couplings via two M5 x 25mm cap screws and two M5 nyloc nuts ***per arm*** (Figure 2.13).

The overhead linear slide and gyroscope assemblies will need to be manipulated into the desired position in order to secure the connecting arms into the desired location. This step will also need to be repeated on the opposite side of the system.

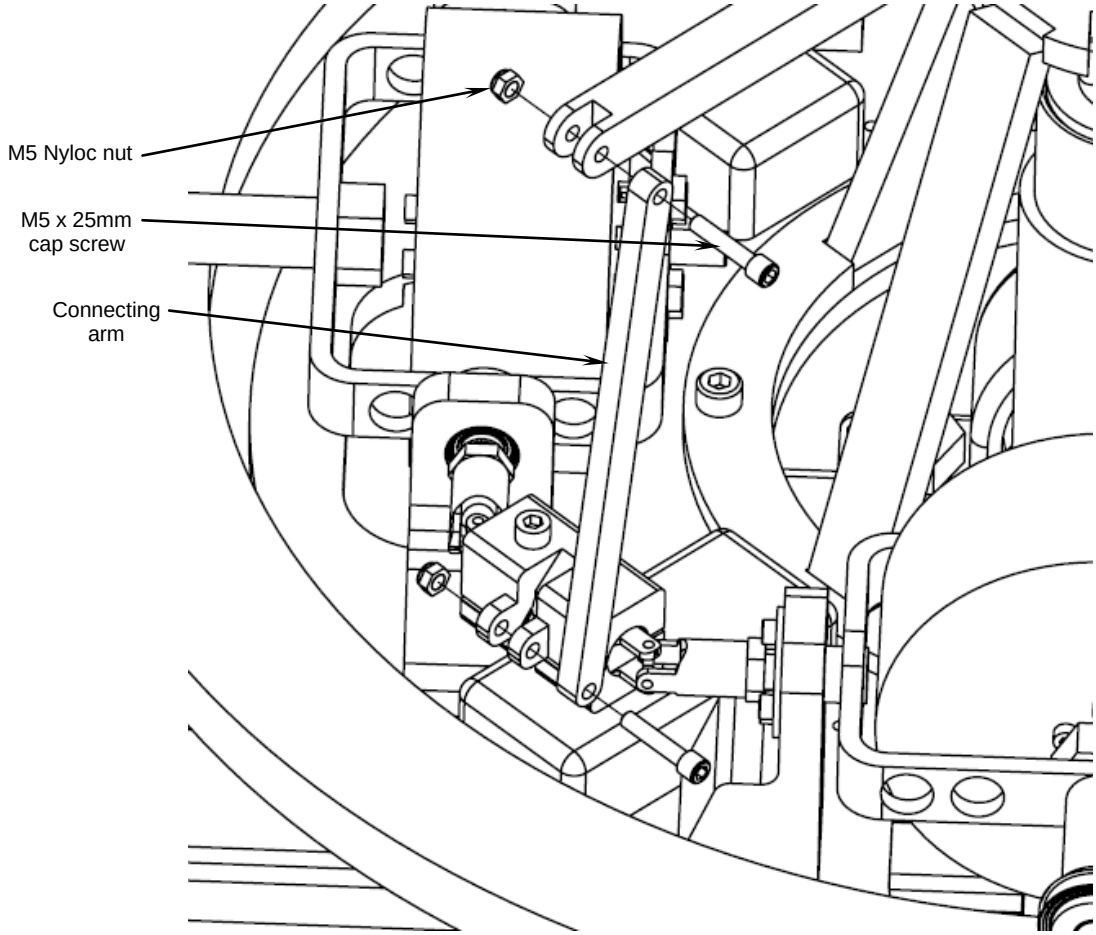

Figure 2.13 – Attaching connecting arms to clamping coupling and overhead linear slide

The nyloc nuts must not be tightened up against any surfaces. This will ensure the joints where they are included are free to move with no resistance.

Section 2.3 Conclusion of Prototype B assembly

Prototype B should now be completely assembled. It is recommended that all joints, connections, nuts, bolts and connections are secure and tight before operating the machine and attempting to achieve stabilization.

It is also recommended that all wires and cables are either cable tied to a surface via the available holes and cavities on the assembly or taped down to avoid any catching or tangling from occurring during operation of the machine.

Section 3: Assembly of Prototype B Sub-systems

The following section includes the assembly diagrams and bill of materials for each of the six sub-systems that form Prototype B. The 6 subsystems are:

- Gyroscopes (SP2-01-001)
- Disc (SP2-02-001)
- External structure (SP2-03-001)
- Disc Drive Mechanism (SP2-04-001)
- Gimbal Frame Linkage (SP2-05-001)
- Central Pivot (SP2-06-001)

The layout of this section will comprise of an assembly drawing of each sub-system with part balloons that relate to a bill of materials of that sub-system on the following page.

Section 3.1 Tools required

The following tools will be needed for the assembly of each of the Prototype B subsystems:

- Adjustable spanners to suit M10 – M40 bolts and nuts
- Allen keys to suit M3, M4, M5, M6, and M8 cap screws
- 10m ring spanner
- Can of CRC
- Velcro tape
- Electrical tape
- Duct tape

Section 3.2 Gyroscopes

The following section presents an exploded view of the gyroscopes and the associated bill of materials. Note it is critical when assembling the DC brushless motor into the gimbal frame that the motor power cables point down and to the left (when looking from the front of the assembly).

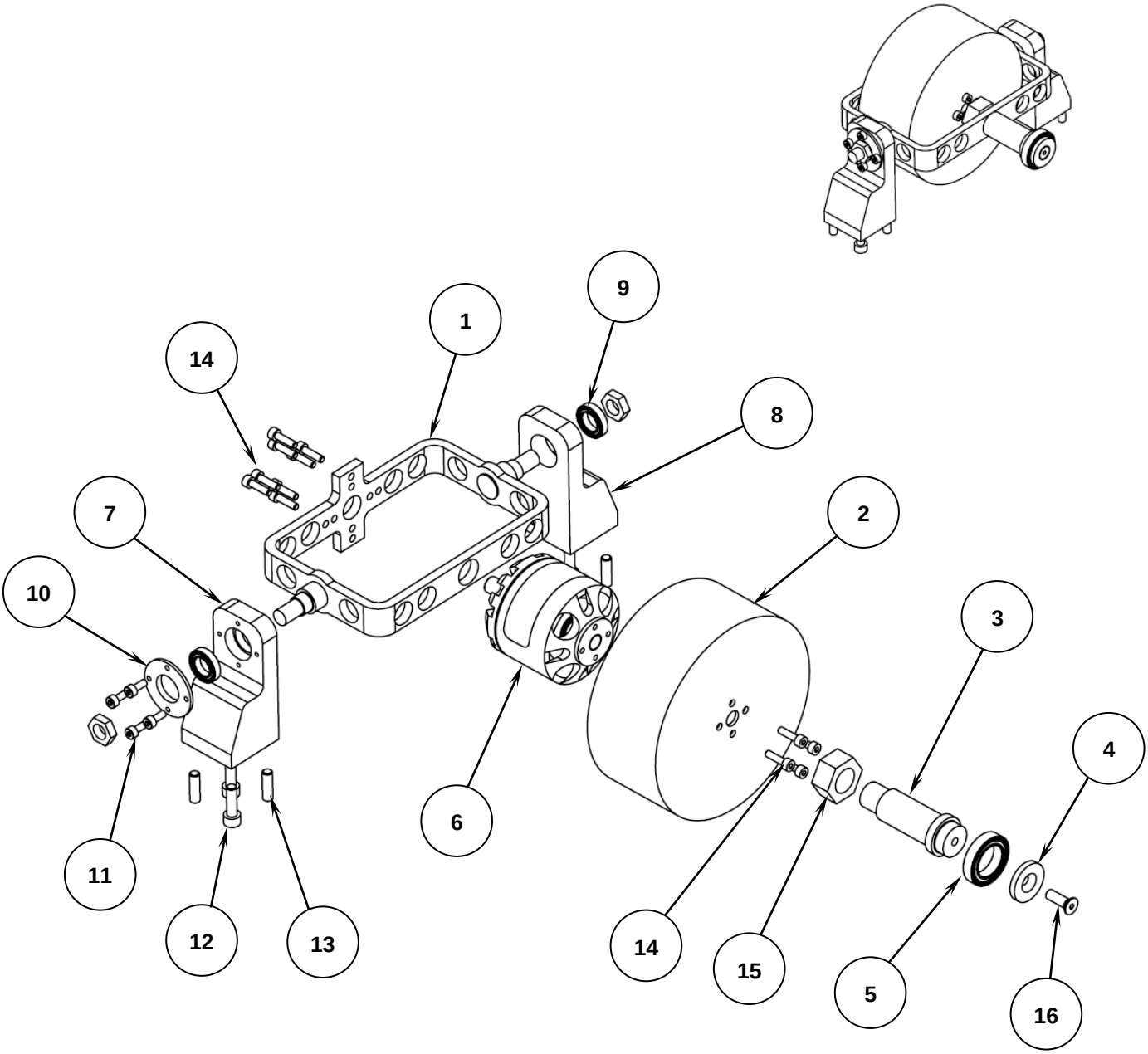

Figure 3.1 – Gyroscopes (SP2-01-001)

Table 3.1 – Bill of materials for gyroscopes relating to Figure 3.1

	Part No.	Description	Part/Assembly	Material	No. Required
1	SP2-01-002	Gimbal frame	Assembly	N/A	1
	SP2-01-003	Lightweight gimbal frame	Part	Mild Steel	1
	SP2-01-004	Gimbal frame shaft	Part	4140	2
2	SP2-01-005	Flywheel	Part	4140	1
3	SP2-01-006	Gimbal frame contact arm	Part	4140	1
4	SP2-01-007	Contact arm end cap	Part	5083 Aluminium	1
5	SP2-01-008	Ø20mm ID, Ø32mm OD deep groove bearing	Part	N/A	1
6	SP2-01-009	MP160 Brushless DC Motor	Part	N/A	1
7	SP2-01-010	Gimbal frame leg	Part	7075 Aluminium	1
8	SP2-01-011	Gimbal frame leg - Right	Part	7075 Aluminium	1
9	SP2-01-013	Ø12mm ID, Ø21mm OD deep groove bearing	Part	N/A	8
10	SP2-01-014	Spacer washer	Part	7075 Aluminium	4
11	-	M3 x 10 cap screw	-	N/A	16
12	-	M6 x 20 cap screw	-	N/A	16
13	-	Ø4mm x 20 dowel pin	-	N/A	16
14	-	M16 nut	-	N/A	1
15	-	M6 x 15 countersunk screw	-	N/A	1
16	-	M4 x 15 cap screw	-	N/A	12

Section 3.2 Disc

The following section presents an exploded view of the disc and the associated bill of materials. Note that the Li-Po batteries (3) are secured to the disc in the designated cavities via Velcro tape

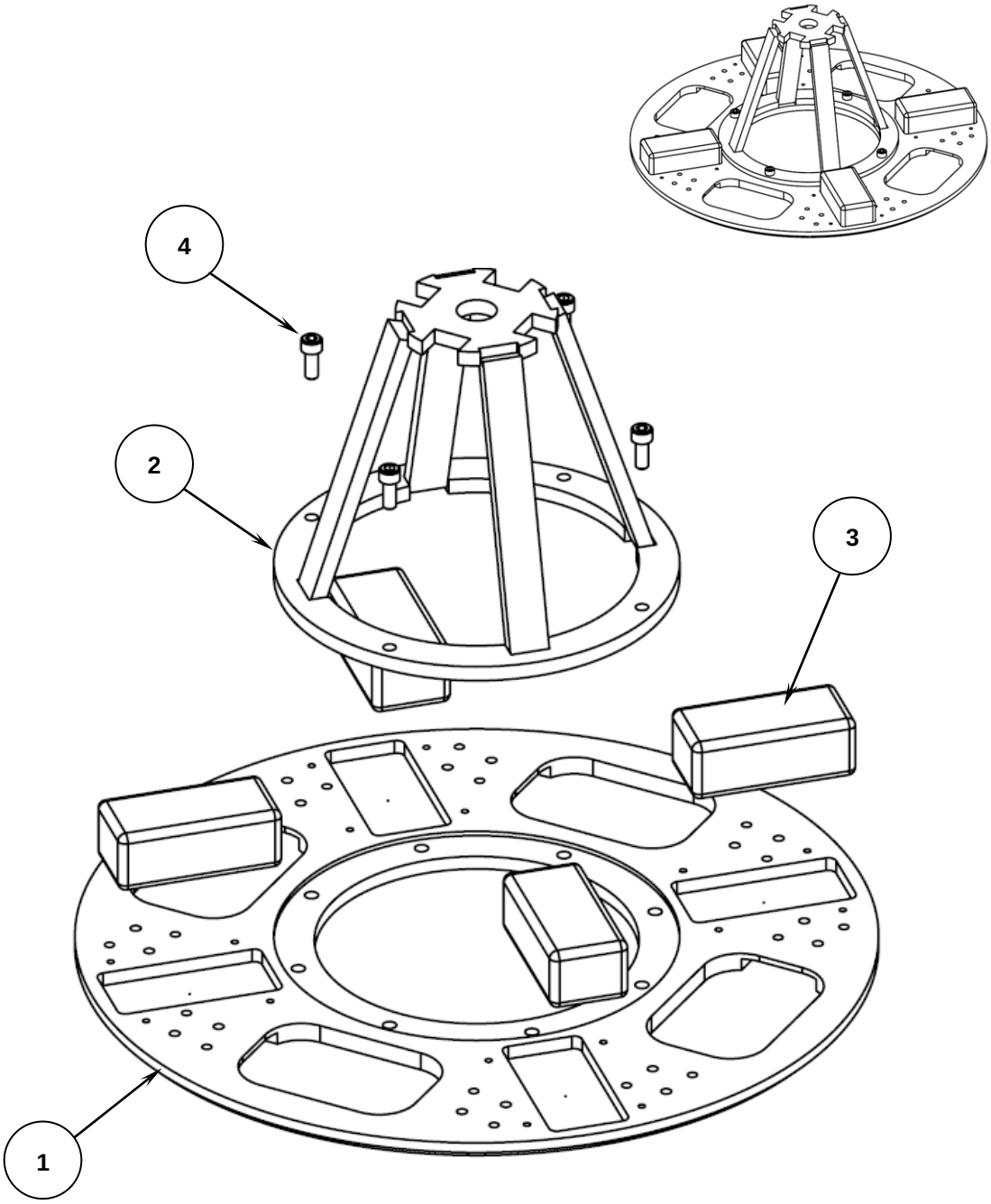

Figure 3.2 - Disc

Table 3.2– Bill of materials for disc relating to Figure 3.2

	Part No.	Description	Part/Assembly	Material	No. Required
1	SP2-02-002	Disc plate	Part	7075 Aluminium	1
2	SP2-02-003	Centre cone section	Part	7075 Aluminium	1
3	SP2-02-004	22.2V 2200mAh 6 cell Li-Po battery	Part	N/A	4
4	-	M8 x 20 cap screw	-	N/A	4

Section 3.3 External structure

The following section presents an exploded view of the external structure and the associated bill of materials. The external structure mount frame and associated fasteners are not included in this assembly. For information regarding these components see Step 1 and 2 of Section 2.2.

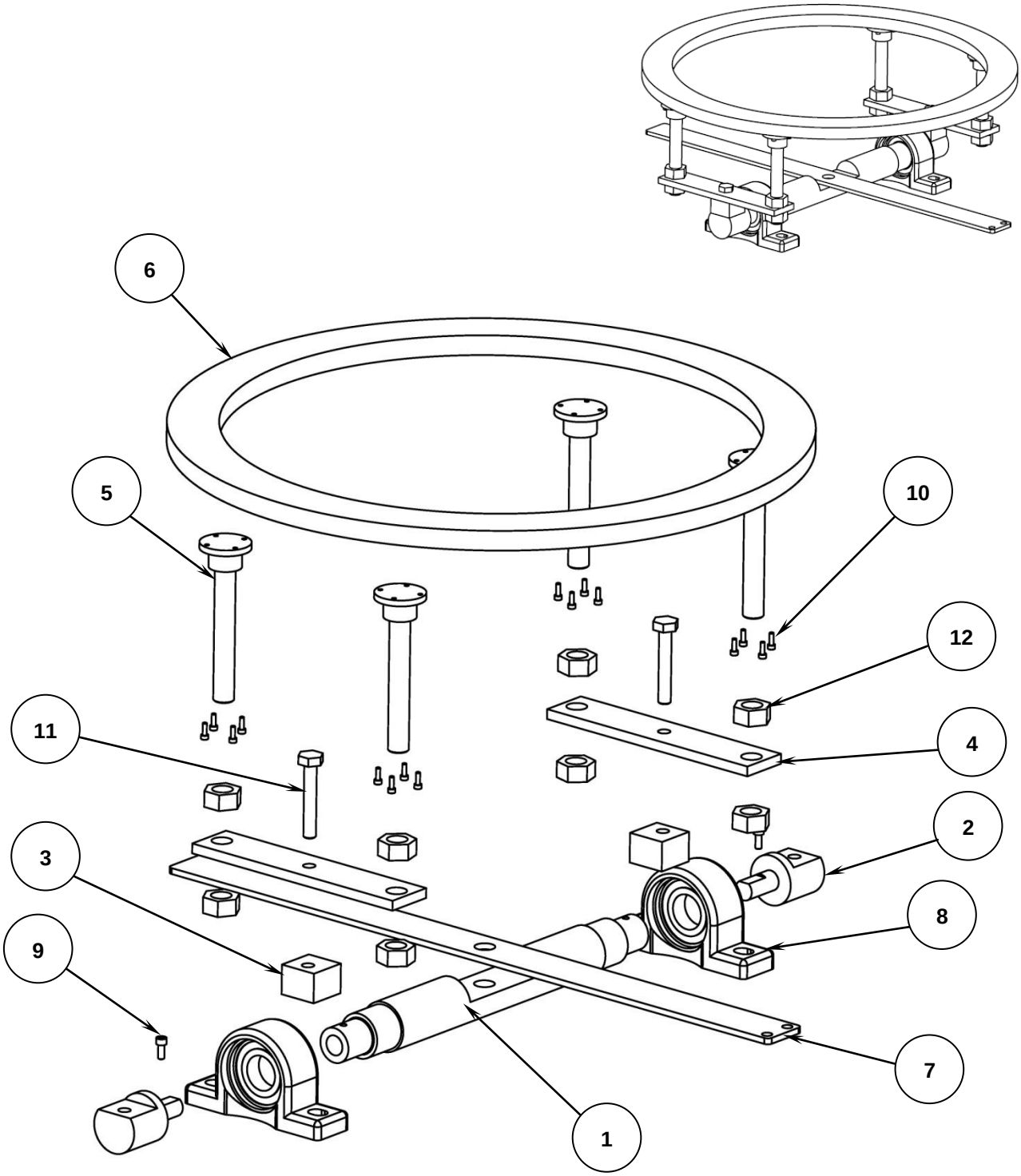

Figure 3.3 – External Structure

Table 3.2– Bill of materials for external structure relating to Figure 3.3

	Part No.	Description	Part/Assembly	Material	No. Required
1	SP2-03-002	Tilt frame shaft	Part	5083 Aluminium	1
2	SP2-03-003	Main shaft end cap	Part	5083 Aluminium	2
3	SP2-03-004	Outer ring leg spacer	Part	7075 Aluminium	2
4	SP2-03-005	Leg mount plate	Part	7075 Aluminium	2
5	SP2-03-006	Outer ring mount legs	Part	5083 Aluminium	4
6	SP2-03-007	Outer contact ring	Part	7075 Aluminium	1
7	SP2-03-008	Tilt arm	Part	7075 Aluminium	1
8	-	Ø35mm Pillow Blocks	-	N/A	2
9	-	M6 x 12 cap screw	-	N/A	2
10	-	M4 x 12 cap screw	-	N/A	16
11	-	M12 x 75 bolt	-	N/A	2
12	-	M20 nut	-	N/A	8

Section 3.4 Disc drive mechanism

The following section presents an exploded view of the disc drive mechanism and the associated bill of materials.

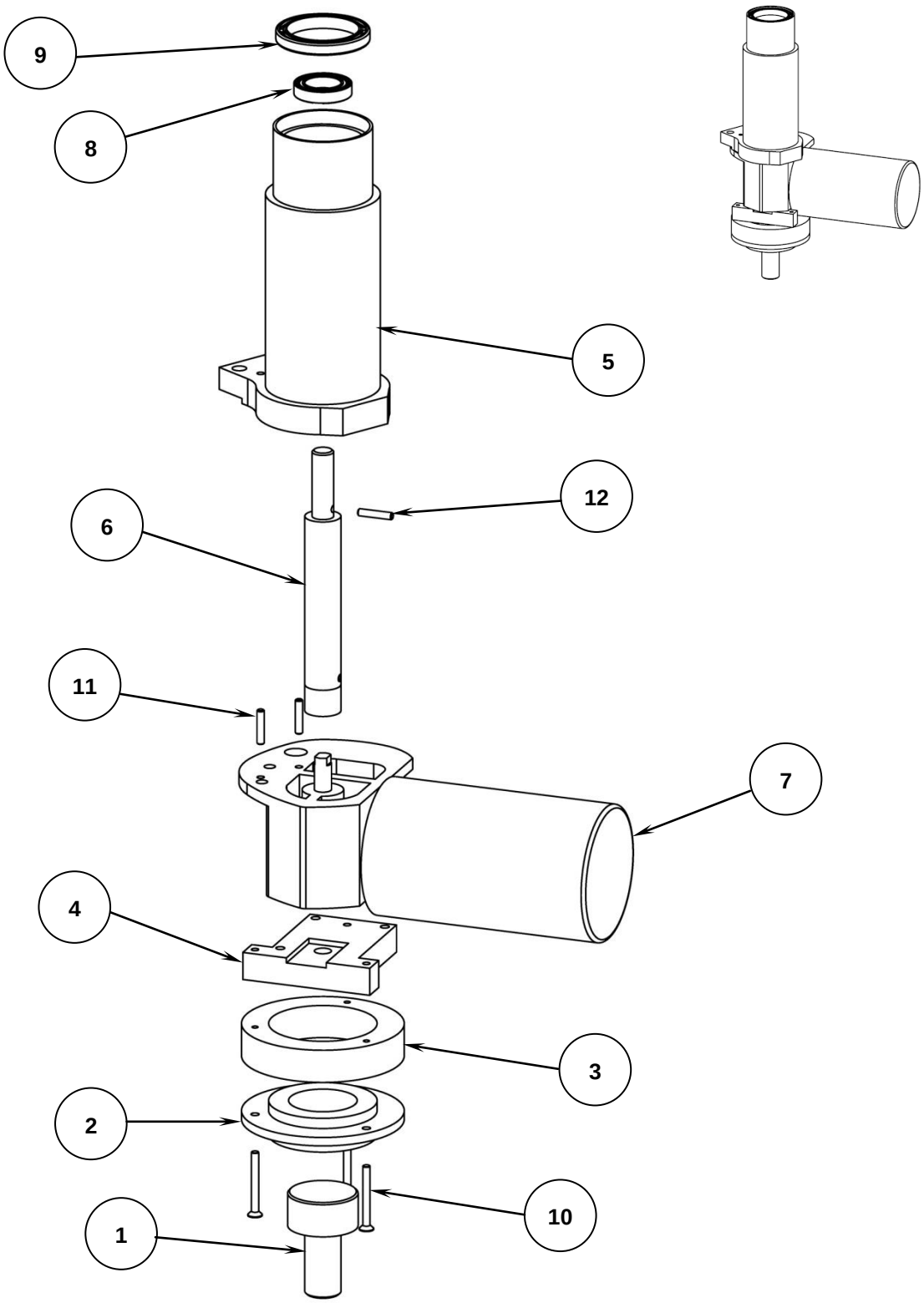

Figure 3.4 – Disc drive mechanism

Table 3.4 – Bill of materials for disc drive mechanism relating to Figure 3.4

	Part No.	Description	Part/Assembly	Material	No. Required
1	SP2-04-002	Bottom threaded structure connection	Part	5083 Aluminium	1
2	SP2-04-003	Bearing housing threaded boss	Part	5083 Aluminium	1
3	SP2-04-004	Bottom connecting boss	Part	5083 Aluminium	1
4	SP2-04-005	Boss mount block	Part	7075 Aluminium	1
5	SP2-04-006	Bearing housing	Assembly	N/A	1
	SP2-04-007	Top bearing housing section	Part	5083 Aluminium	1
	SP2-04-008	Centre pillar	Part	5083 Aluminium	1
	SP2-04-009	Centre pillar mount	Part	7075 Aluminium	1
6	SP2-04-010	Central drive shaft	Assembly	N/A	1
	SP2-04-011	Drive shaft	Part	4140 Steel	1
	SP2-04-012	Drive shaft coupling	Part	4140 Steel	1
	-	Ø4mm x 20 dowel pin	-	N/A	1
7	SP2-04-013	24V Worm drive DC motor	Part	N/A	1
8	SP2-04-014	Ø20mm ID, Ø32mm OD deep groove bearing	Part	N/A	1
9	SP2-04-015	Ø40mm ID, Ø52mm OD deep groove bearing	Part	N/A	1
10	-	M4 x 20 countersunk screw	-	N/A	3
11	-	Ø6mm x 20 dowel pin	-	N/A	2
12	-	Ø4mm x 20 dowel pin	-	N/A	1

Section 3.5 Gimbal frame linkage

The following section presents an exploded view of the gimbal frame linkage and the associated bill of materials. Only the overhead linear slide assembly will be shown. For the full assembly of all parts relating to the gimbal frame linkage see Step 7 of Section 2.2.

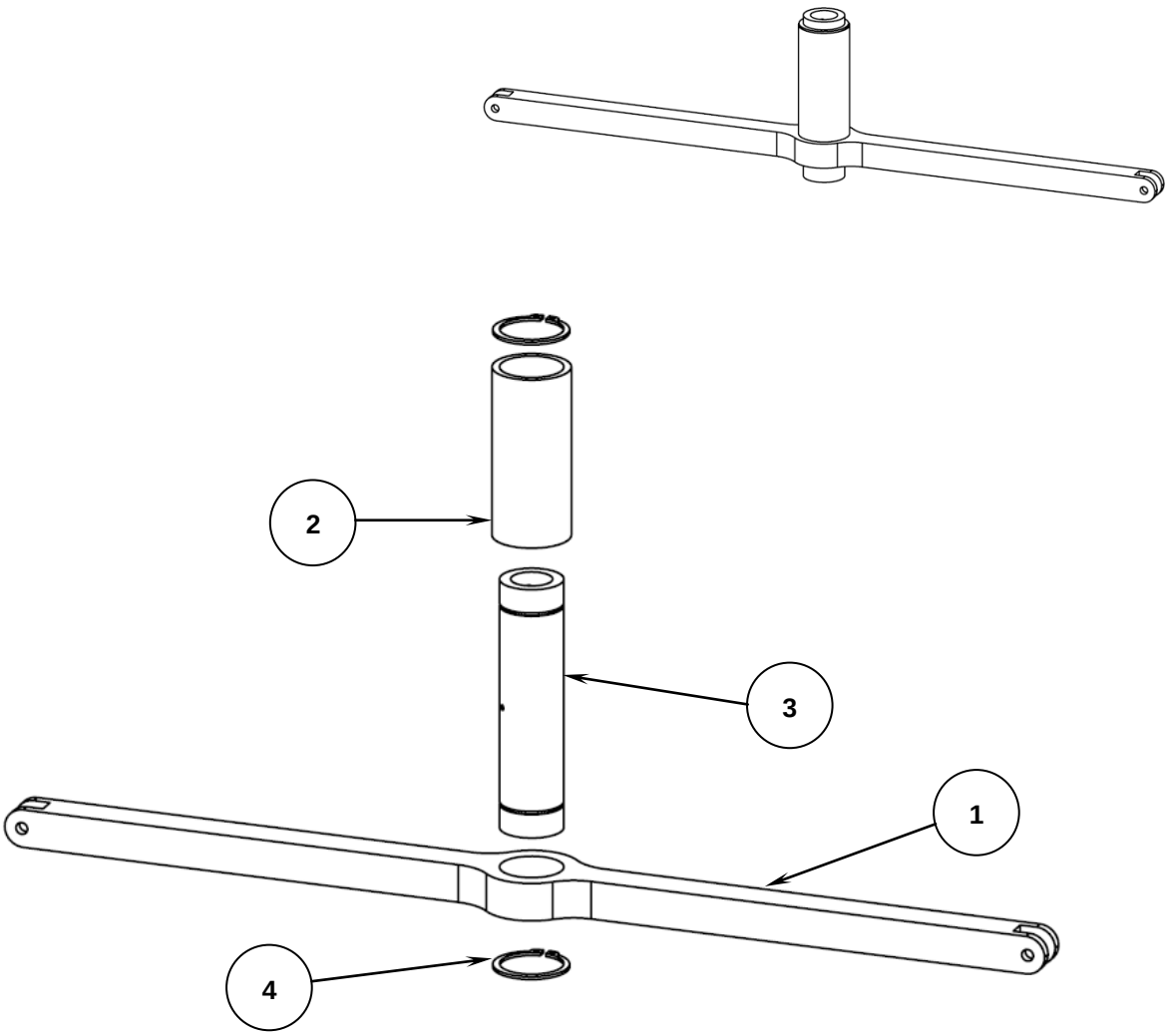

Figure 3.5 – Gimbal frame linkage

Table 3.5 – Bill of materials for gimbal frame linkage relating to Figure 3.5

	Part No.	Description	Part/Assembly	Material	No. Required
	SP2-05-002	Overhead linear slide	Assembly	N/A	1
1	SP2-05-003	Overhead connecting arm	Part	7075 Aluminium	1
2	SP2-05-004	Linear bearing spacer	Part	5083 Aluminium	1
3	SP2-05-005	Ø16 x 86mm Linear bearing	Part	N/A	1
4	-	Ø26mm circlip	Part	N/A	2

Section 3.6 Central pivot

The following section presents an exploded view of the central pivot and the associated bill of materials.

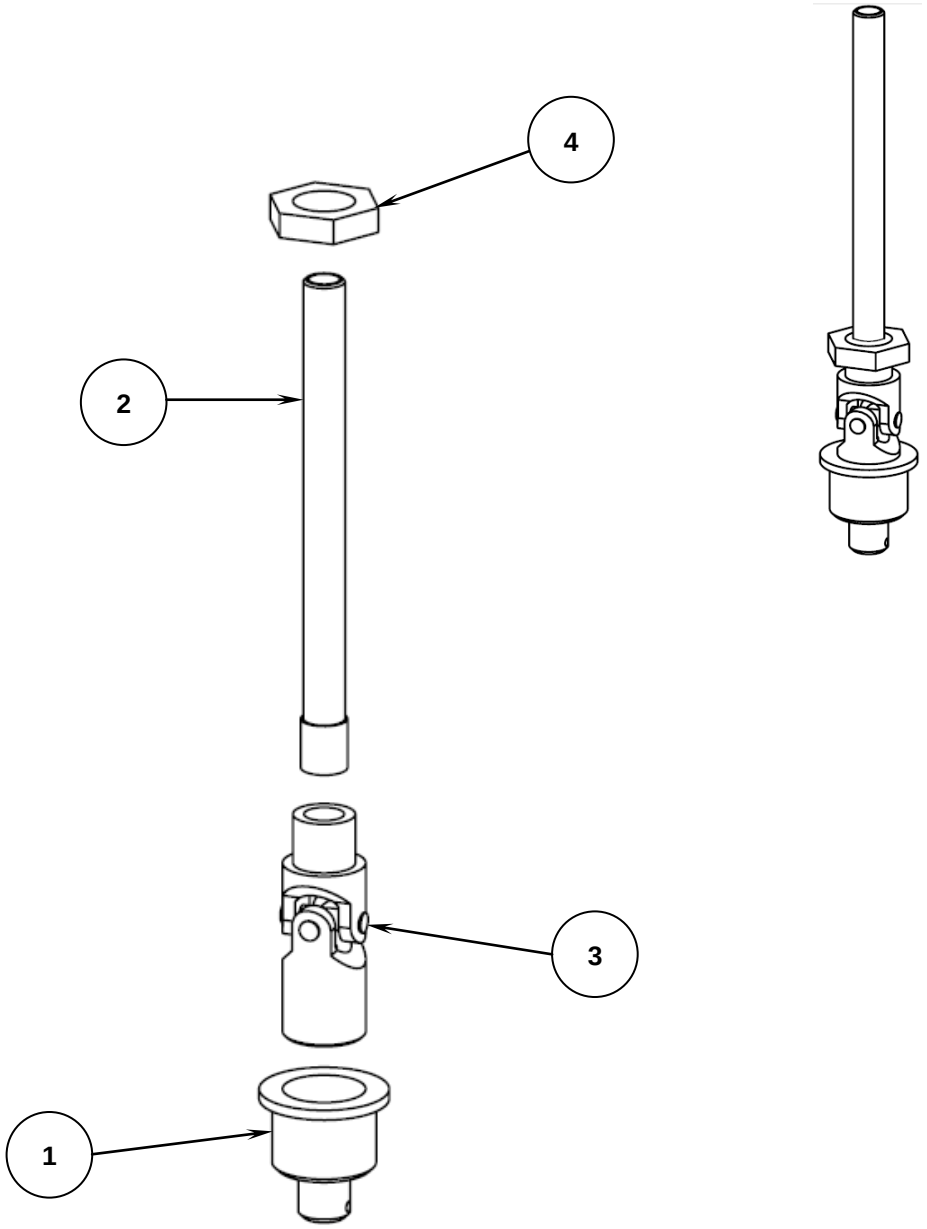

Figure 3.6 – Central pivot

Table 3.6 – Bill of materials for central pivot relating to Figure 3.6

	Part No.	Description	Part/Assembly	Material	No. Required
1	SP2-06-002	Universal joint coupling	Part	4140 Steel	1
2	SP2-06-003	Main shaft	Part	4140 Steel	1
3	SP2-06-004	Ø32mm Universal Joint	Part	Mild Steel	1
4	-	M24 half nut	-	N/A	1

Section 3.7 Conclusion of sub-systems assembly

This section has presented the assembly diagrams and bill of materials relating to the assembly of the sub-systems that comprise Prototype B

Before assembling the sub-systems together to form the overall system it is recommended that all fasteners and connections are shown to be rigid and tight (where applicable).

Section 4: Operational Procedure for Prototype B

The following section outlines the testing procedures that will result in Prototype B exhibiting stabilizing oscillatory behaviour. It should be noted that the values stated in this section relating to the settings on various power supplies are obtained from extensive testing of the system. It is recommended the user varies and adjusts these values to gain a better understanding of the performance of the system. This may also be required to obtain the desired response from Prototype B.

Section 4.1 Power supplies and associated components

Prototype B uses four power supplies. Each power supply has a set of associated components. The purpose of this section is to familiarise the user with each of the power arrangements. Table 4.1 outlines each of the power supplies and the components they relate to.

Table 4.1 – Power supplies and associated components

Power Supply	Number	Function	Associated components
22.2V Li-Po battery	4	Supply power to flywheels	- Electronic speed controllers - MP160 brushless DC motors - 4-to-1 channel wire - Receiver - Transmitter
4.8V Ni-MH battery	1	Supply power to ESC	- Receiver
DC Variable Power Supply	1	Supply power to the relay switches to alternate the direction of precession of the disc	- Relay switch - Square wave generator - Relay circuit
DC Variable Power Supply	1	Supply power to the 24V drive motor to precess the disc	- Relay circuit

The above power supplies are identified in Figures 4.1 – 4.3 shown on the next page.

Figure 4.1 – 22.2V Li-Po battery

Figure 4.2 – 4.8V Ni-Mh battery

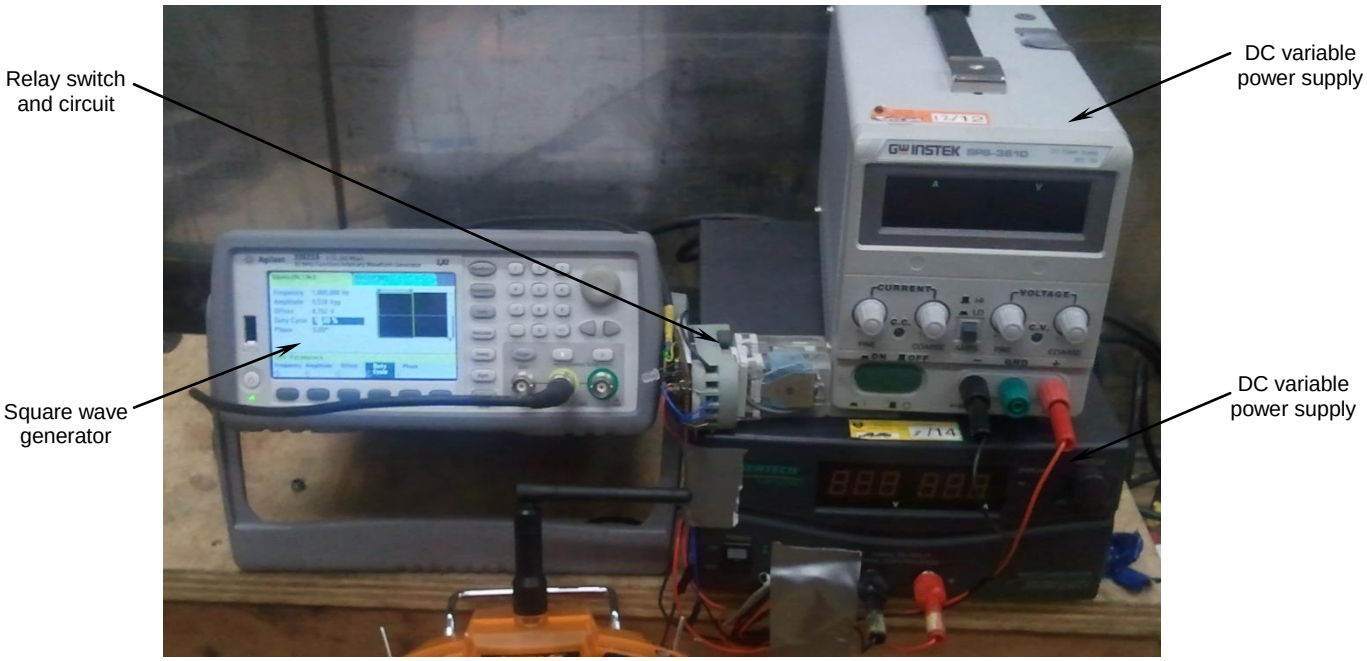

Figure 4.3 – Main power supply arrangement

Section 4.2 Flywheel motor power arrangement

The procedure for connecting the flywheel motor power system together is simple due to the use of hobby electrical components. All associated wire plugs and connections are specific to each component (that is that the brushless DC motor can only connect to the correct end of the electronic speed controller) making assembling the power arrangement quick and easy.

The functions of each of the components that comprise the flywheel motor power arrangement are shown below. Note that the number in brackets indicates the number of components that are used in Prototype B.

- Electronic speed controller (ESC) *(4)* – converts the signal from the receiver and draws power from the batteries to produce a signal to drive the brushless DC motor.
- Li-Po battery *(4)* – supplies power to the brushless DC motor.
- Brushless DC motor *(4)* – drives the gyroscope flywheels.
- 4-to-1 channel wire *(1)* – takes all four of the ESC's that comprise the total system and channels them into one wire that plugs into the receiver. This is included to ensure all four gyroscopes receive the same signal and are therefore rotating at equal speeds.
- Receiver *(1)* – receives the signal from the transmitter and supplies this signal to the ESC.
- Transmitter *(1)* – controller held by operator. Movement of drive switch controls flywheel motor speed.
- Ni-Mh battery *(1)* – due to the high spec ESC a separate power supply is required.

The power cables for the brushless DC motor should be pointing down and to the left (if assembled as per the instructions in Section 3.2). These cables connect to the ESC which in turn connects to the Li-Po batteries. Some sparking may occur when connecting the ESC to the Li-Po batteries. Ensure fingers are not holding any of the wires (only the plug) when performing this step. The ESC also has a small set of wires coming off it that connect to the 4-to-1 channel wire which plugs into ***Channel 3*** of the receiver. The 4.8V Ni-Mh battery is then connected to the ***BATT*** channel of the receiver.

A schematic showing how the components are connected is shown in Figure 4.4.

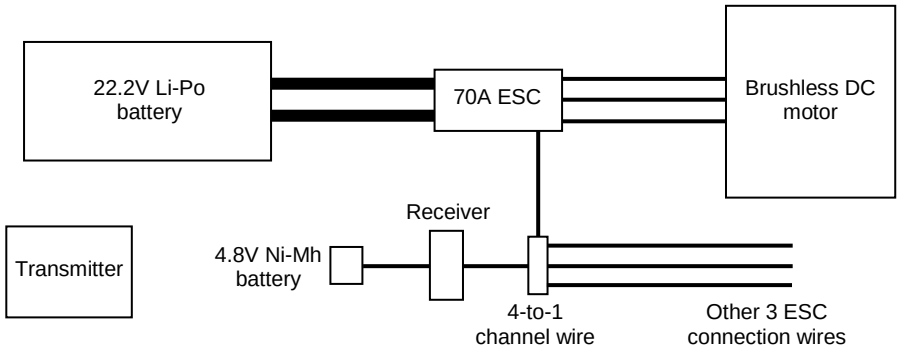

Figure 4.4 – Flywheel motor power arrangement

Section 4.3 Disc precession motor power arrangement

The disc precession motor power arrangement is used to oscillate the disc back and forth at a designated frequency. This is achieved by varying the input parameters of a square wave generator and a variable power supply.

The functions of each of the components that comprise the disc precession motor power arrangement are shown below. Note that the number in brackets indicates the number of components that are used in Prototype B.

- Relay switch and circuit *(1)* – the central connection hub for all components that comprise the disc precession motor power arrangement. The main function of the relay switch and circuit is to take the signal from the square wave generator and (coupled with the power from the two variable power supplies) transmit an oscillating signal to the 24V DC motor.
- Variable power supply 1 *(1)* – the function of power supply 1 is to provide power to the relay switch to allow it to alternate the voltage. This power supply is set to 14V (the relay switch needs 12V to operate).
- Variable power supply 2 *(1)* – the power supply that drives the 24V DC motor. The voltage of this power supply is varied to obtain the desired response from the system in conjunction with the square wave generator parameters.
- Square wave generator *(1)* – a unit that produces a specified voltage shape. A particular setting within the square wave generator is selected which has been programmed by an electrical technician (refer to generator manual). The square

wave generator consists of 5 parameters that can all be varied to obtain the desired response. These are identified in Table 4.2.

- 24V DC motor *(1)* – motor with in-built worm drive used to precess the disc back and forth.

A schematic showing how the components of the disc precession drive arrangement are connected is shown in Figure 4.5.

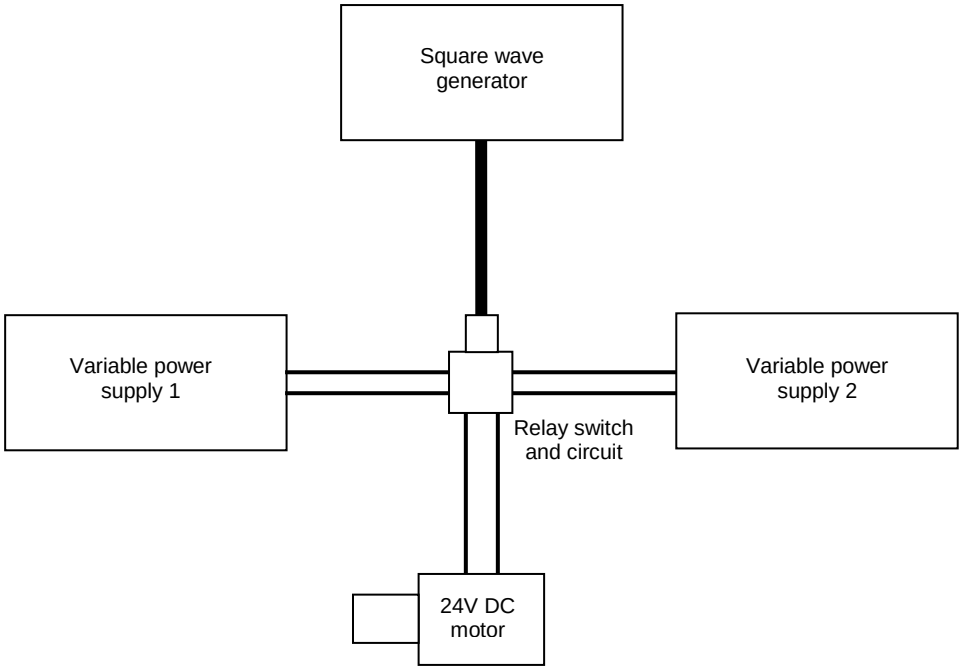

Figure 4.5 – Disc precession motor power arrangement

The relay switch and circuit should be secured in place on a non conductive surface. The positive and negative connections of each of the power supplies are connected to their associated connections on the circuit board. The positive and negative output cables of the circuit board can then be attached to the 24V motor.

The square wave generator output cable is a single wire that attaches to a special connection on the circuit board. It is recommended that the parameters of the square wave generator are set to the values in Table 4.2.

Table 4.2 – Square wave generator parameters

Parameter	Value
Frequency	1.00Hz
Amplitude	0.500Vpp
Offset	4.252V
Duty Cycle	50.00%
Phase	0.00°

Testing of the system revealed that the optimal voltage of the 24V DC power supply was approximately 16.5V.

Section 4.4 Operation of Prototype B

Once all power supply arrangements have been connected as per this manual the system may be switched on so that the stabilization process may begin. The safest order to turn on the system is:

1) Connect all flywheel motor power arrangements as per Section 4.1.
2) Turn on transmitter and wait for red LED on receiver to come on and remain solid (confirming it is paired to the transmitter). Brushless DC motor should sound a series of beeps and then a single beep every 2 seconds. ***Do not begin to drive flywheels at this stage!***
3) Connect the disc precession motor power as per Section 4.2.
4) Turn on the square wave generator and set desired parameters
5) Turn on relay switch variable power supply and increase voltage until switch activates and a switching noise is heard (approximately 13V).
6) Turn on 24V DC motor variable power supply and slowly increase voltage until desired disc precession occurs.
7) ***Slowly*** move transmitter joystick to begin to drive flywheels until desired speed is obtained.
8) Vary system parameters until desired response is achieved.

Section 4.5 Conclusions of operational procedure

This section has outlined the connection of the power arrangements that drive Prototype B. It has also outlined the steps that must be followed to operate the system.

While the values outlined in this manual were shown to work after extensive testing it is highly recommended that the user vary and alter them to gain a greater understanding in the operation of Prototype B. It is also likely that the user will need to vary the system parameters to obtain the desired oscillatory response from Prototype B.

It is recommended that the current system is not operated continuously for an extended period of time (> 5 minutes). This will help mitigate the issue of overheating components and allow for connections that may have vibrated loose to be inspected.

Section 5: Safety

Due to the high kinetic energy and large number of spinning components that comprise Prototype B, the user must be constantly aware of the large number of safety issues associated with operating the system. This section will highlight the critical safety issues that must be addressed during the assembly and operation of Prototype B. These are:

- Testing area – the current location of Prototype B (testing container) is the optimal testing area for the system. It contains a partition that separates the operator and any other viewers from the machine should any failure occur during operation. A similar partition must always be used when testing the system. No person should ever be exposed to the machine when it is turned on without protection between themselves and Prototype B.

- Safety glasses – safety glasses must be worn at all times when working on and operating Prototype B.

- Brushless DC Motors – the flywheel motors draw a significant amount of current (up to 70A). It is highly recommended that all wiring and electrical connections on Prototype B are fully understood and the safety issues relating to working with such high currents are understood.

- Pinching/jamming of fingers – due to the weight of some of the sub-assemblies that make up Prototype B, care must always be taken when assembling components together. The highest risk of injury occurs when placing the disc/gyroscopes assembly onto the central pivot (see Section 4.2, Step 6). This step must be completed by 2 people to avoid any injury.

- External structure stop – the external structure is able to tip back and forth. A safety stop has been manufactured and must be inserted when the system is inactive.

- Kill switch – it is recommended that all components that require mains power are connected to a single outlet via a multi-board. This will allow all power to be cut from the system at a single point. There is currently no rapid method of stopping the flywheels and the operator should always be aware of this and operate the machine accordingly.