MULTI-LEVEL SEISMIC PERFORMANCE ASSESSMENT OF A DAMAGE-PROTECTED BEAM-COLUMN JOINT WITH INTERNAL LEAD DAMPERS

K. M. Solberg [1], B.A. Bradley [2], J.B. Mander [3], R. P. Dhakal [4], G.W. Rodgers [5], J.G. Chase [6].

1) M. E. Candidate, Department of Civil Engineering, University of Canterbury, NZ
2) Ph.D. Candidate, Department of Civil Engineering, University of Canterbury, NZ
3)Professor, Department of Civil Engineering, University of Canterbury, NZ
4) Senior Lecturer, Department of Civil Engineering, University of Canterbury, NZ
5) Ph.D. Candidate, Department of Mechanical Engineering, University of Canterbury, NZ
6) Professor, Department of Mechanical Engineering, University of Canterbury, NZ

kms@mka.com, bab54@student.canterbury.ac.nz, rajesh.dhakal@canterbury.ac.nz, john.mander@canterbury.ac.nz, gwr37@student.canterbury.ac.nz, geoff.chase@canterbury.ac.nz.

Abstract: A multi-level seismic performance assessment is performed on a near full scale beam-column subassembly. The physical model is taken from a 3D exterior connection of a jointed precast concrete frame structure that is designed for damage avoidance. Unbonded post-tensioned prestress is provided by high-alloy high-strength thread-bars. Draped and straight tendon profiles are used in the transverse and orthogonal directions, respectively. The joint region is armoured to avoid damage by providing steel plates at the beam-column contact points. Supplemental energy dissipation is provided by high-performance lead-damping devices cast internally in each beam. Bi-directional quasi-earthquake displacement profiles are applied meaning the input displacement profiles are taken directly from the results of inelastic dynamic analysis. Three input earthquakes are selected probabilistically to represent multiple levels of seismic demand. Results from physical testing are critically discussed.

1. INTRODUCTION

Research and development of jointed precast concrete structures has gained considerable momentum over the past two decades, with significant research on so-called PRESSS systems being conducted in the United States for buildings (Priestley et al., 1999) and Damage Avoidance Design (DAD) bridges (Mander and Cheng, 1997). These systems, which exhibit non-linear response by connection opening rather than by the formation of a ductile plastic hinge, have markedly less inherent energy dissipation than ductile monolithic systems. Therefore, supplemental energy dissipation devices are often provided to help reduce displacement response from earthquakes. Various dissipation devices have been investigated (Stanton et al., 1997; Amaris et al., 2006), and are limited by the fact that, for various reasons, they must be replaced following a seismic event. It then becomes apparent that a more robust form of energy dissipation is needed which satisfies several objectives: (i) the damper should not be at risk of low-cycle fatigue fracture; (ii) the damper should, ideally, be located internally within the beam-end region; (iii) residual compression forces in the damper device should creep back towards zero over time; and (iv) the damper device should be economically feasible.

In response to these objectives, the application of *lead-extrusion* (LE) dampers was developed as part of this study. To provide a reliable form of energy dissipation and an architecturally pleasing finish, LE dampers (Cousins and Porritt, 1993) are buried within the beam-end regions. Attention is given to the detailing of the joint region to reduce materials and improve constructability while still

adhering to the overall objective of ensuring that elements remain damage-free.

This paper presents results of an experimental study using a *Multi-Level Seismic Performance Assessment* (MSPA) of a 3D subassembly, where earthquakes representing multiple levels of seismic demand are selected probabilistically from a comprehensive computational incremental dynamic analysis (IDA).

2. EXPERIMENTAL INVESTIGATION

2.1 Subassembly Development

An 80 percent scale 3D subassembly representing an interior joint on a lower floor of a 3x3-bay 10-storey building was developed. The subassembly consisted of two beams cut at their midpoints and an orthogonal beam cut at its midpoint (the approximate location of the point of contraflexure). All beams were 560mm deep and 400mm wide and all framing into a central 700mm square column. The orthogonal beam, referred to herein as the gravity beam, was designed for one-way precast flooring panels, while the other two beams, referred to herein as the seismic beams, were designed for predominantly seismic forces.

Prestress was provided by two 26.5mm MacAlloy™ thread-bars (f_y = 1100MPa). The prestress system in the seismic direction utilized a straight profile, along the longitudinal axis of the beams. The thread-bars in the gravity beam were draped to provide load balancing with the gravity loading from the one-way floor panels. Shear from gravity and seismic loads were carried by four 30mm shear keys located at each corner of the connecting beam. Details of the longitudinal and transverse reinforcement are given in Figure 1.

A 300mm cast insitu 'wet' joint was provided at the end of each beam. The detailing strategy of the cast insitu joint in the seismic direction is illustrated in Figure 2a. This joint was designed to accommodate the LE damper with maximum dimensions of 150mm by 150mm. This space was provided in the centre of the joint in the seismic beams, and at a 50mm offset from centreline in the gravity beam. A 180PFC channel was used top and bottom to provide the armouring contact surface. The channel also served as a means of mechanically anchoring the longitudinal reinforcing. This was accomplished by providing cuts on the interior flange of the channel whereby the longitudinal thread-bar reinforcing steel could be locked into it using nuts. Furthermore, these nuts provided a means of adjusting the channel flush with the column face during final on-site fabrication. Four 25x10x500mm rods were welded in the corners of each flange. These were provided to help stiffen the joint region to ensure rocking behaviour occurred in a rigid manner. Finally, four 1m threaded rods were spaced at 100mm centres to provide an attachment and anchoring point for the LE damper device.

One of the primary objectives of this study was to improve beam-column joint detailing by improving constructability. In the column, end-plates were sized to provide a full contact surface for the beam's armouring (180 FPC channel, see Figure 2a), and to provide a 10mm extension on all sides. In keeping with *Damage Avoidance Design* (DAD) principles, the column end-plate design was checked to ensure concrete crushing in the column did not occur at the design strength of the connection.

2.2 The lead-extrusion dampers

Supplemental damping was provided by LE dampers, as shown in Figure 3. A single LE damper was designed to fit within in the ends of each beam (Figure 2a). A 30mm rod with one threaded end was used as the damper shaft (Figure 3a). This rod was designed to be coupled to a threaded rod in the column of the same size. Four 18mm threaded rods at 100mm centres were cast into the beam-end and used to anchor the device during the closure pour. The holes on the devices were oversized to allow the device to be adjusted when coupled to the threaded rod in the column.

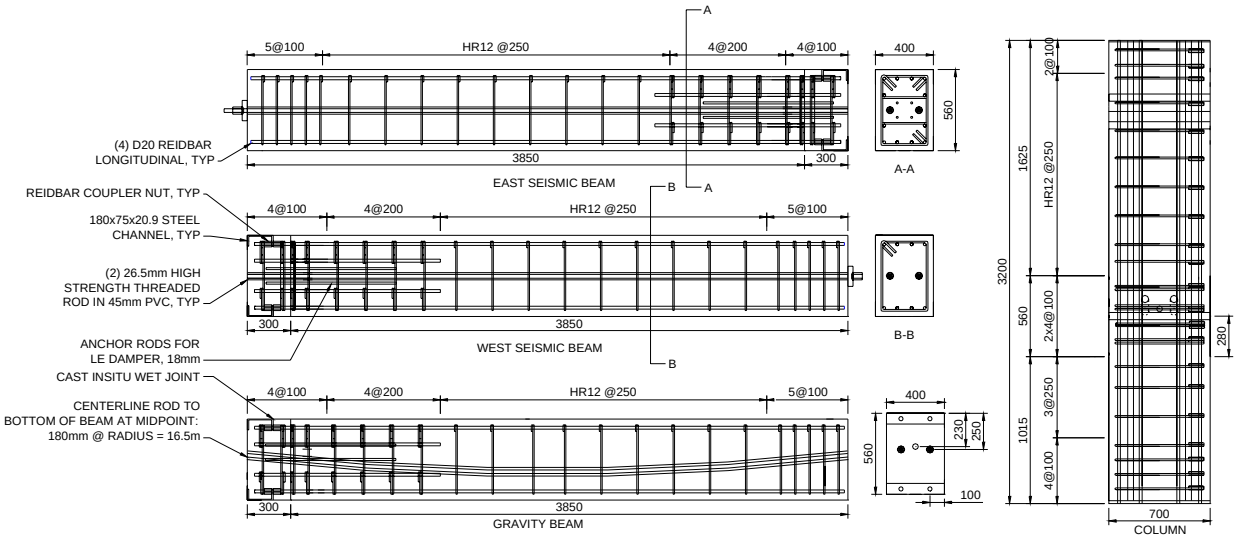

Figure 1: Reinforcement details of the beam-column subassembly elements

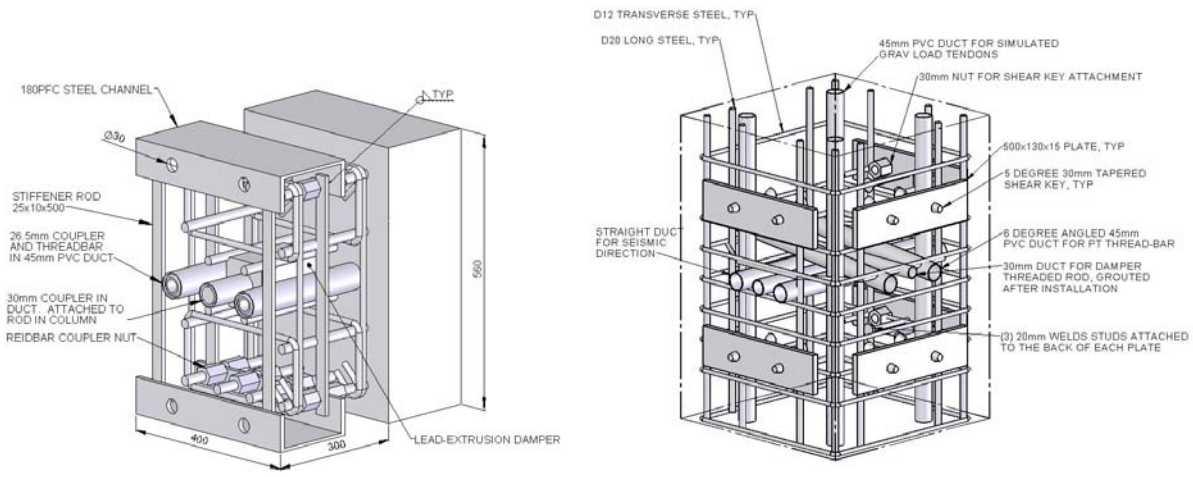

(a) Beam-end region showing closure pour details

(b) Layout of the column portion of the joint

Figure 2: Components of the precast beam-column joint region

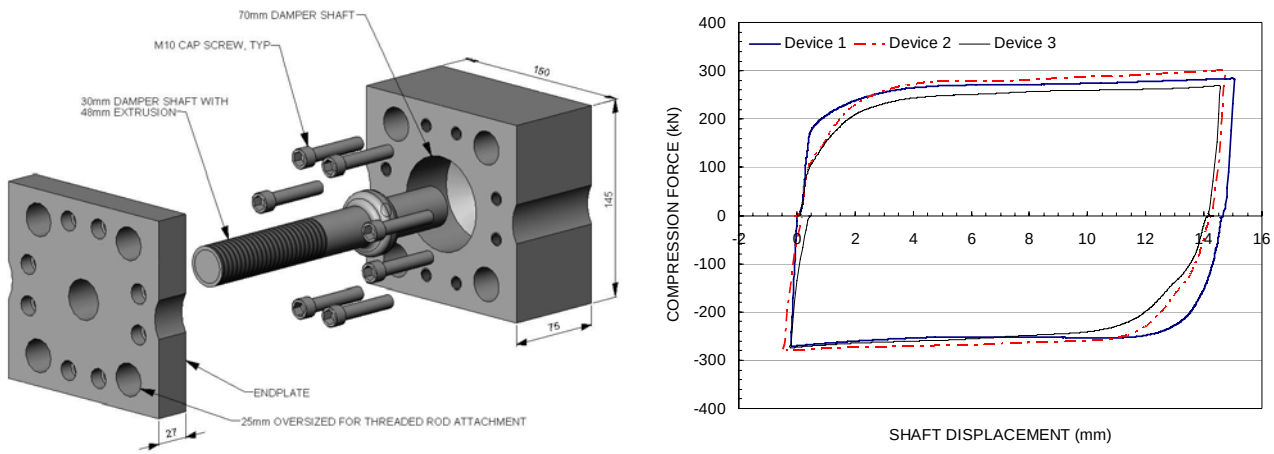

(a) Details of the LE damper

(b) Force-displacement response of the damper

Figure 3: Details and results of the LE damper

Given the initial prestress force of 250kN per thread-bar, the dampers were designed for a 250kN yield force. This corresponds to a re-centering moment ratio of 1.23 and 1.06 in the NS direction for positive and negative moment, (considering over-strength in the dissipator and reduced prestress force) and 1.13 in the EW direction.

3. EXPERIMENTAL SETUP

A photograph of the specimen and the test setup is given in Figure 4a, and a plan view is given in Figure 4b. Displacement of the column was provided by two orthogonal actuators attached at the top of the column, while a third actuator was located at the end of the gravity beam to stabilise the specimen. The column was pinned to the floor using a universal joint, additional pins were provided on the struts of each beam. Rotary potentiometers were installed against the opposite face of each actuator. A vertically oriented hydraulic jack was installed at mid-height of the gravity beam to simulate the presence of precast one-way floor panels. This load was spread over a 1.5m timber block. The load was applied at a constant force of 120kN. The base of the column was pinned with a universal joint, allowing free rotation in both the EW and NS direction.

At one end of each prestress thread-bar anchor, load cells were installed to measure the magnitude of the unbonded prestress throughout testing. Four 32mm high strength thread-bars located along the longitudinal axis of the column were each stressed to 500kN to simulate a total axial load of 2000kN ($0.1f'_cA_g$). Potentiometers were located at various locations around the specimen to record displacements during testing.

(a) View of specimen in laboratory

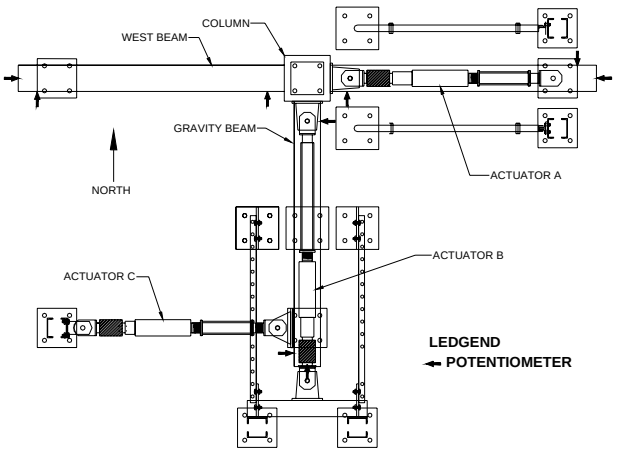

(b) Plan view of the specimen test setup

Figure 4: Isometric view of the specimen test setup

4. EXPERIMENTAL METHODS

Experiments were conducted on the specimen using the *quasi-earthquake displacement* (QED) test method. Details of the QED test method may be found in Dutta et al., (1999). The QED testing method is intended to serve as a more realistic testing protocol, capturing the behaviour of the specimen under 'real' earthquake ground motion. This has three advantages: (i) unlike QS testing which uses controlled cyclic displacements in ascending order, QED testing realistically captures small loading cycles following severe displacement demand from initial pulses; (ii) P-Δ effects can be considered in the analytical model, thus capturing any non-uniform displacement due to

excessive yielding in a single direction; (iii) the behaviour of the specimen subject to QED displacement profiles can be extrapolated to infer likely damage at multiple levels of excitation.

The data generated from preliminary quasi-static tests was used to create an equivalent analytical model of the specimen. This is illustrated in Figure 5a, showing the modelling strategy adopted. A thorough discussion of the development of the 3D analytical model is given elsewhere (Bradley et al., 2006). The natural period of the prototype structure was found to be 1.5s. With the development of a reliable analytical model of the structure, it was then possible to generate a displacement profile at the node of interest which could be used for physical testing. This required the identification of earthquakes likely to represent various levels of demand, considering both rare and relatively frequent earthquakes. A procedure described by Dhakal et al. (2006) was adopted to define three key earthquake records representing multiple levels of seismic demand. This procedure consists of performing an *Incremental Dynamic Analysis* (IDA) (Vamvatsikos and Cornell, 2002) to identify the response of the structure from various earthquakes. Using this data, earthquakes representing non-exceedance probability (percentile) levels at various earthquake intensities can be identified and used for subsequent analysis.

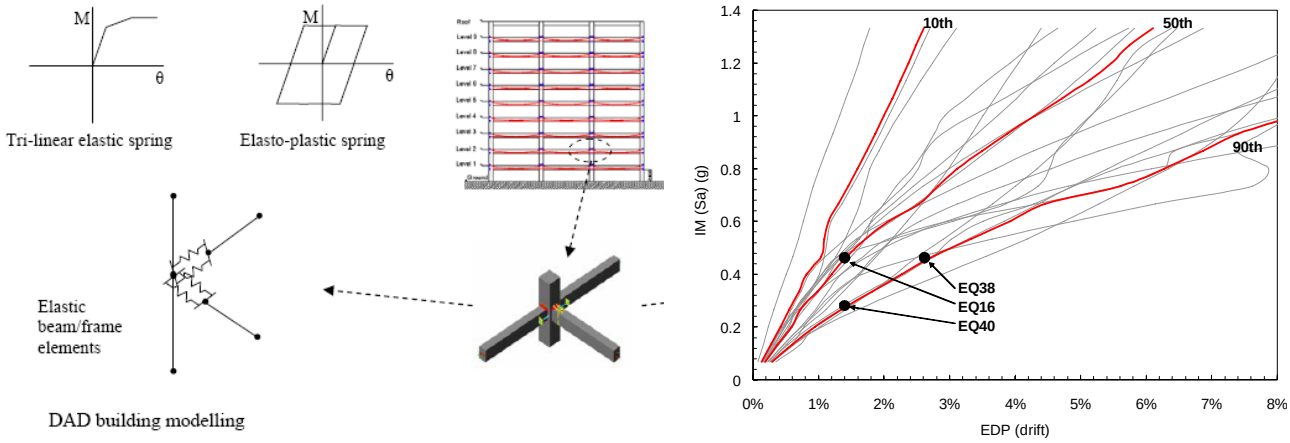

(a) Details of the analytical modelling

(b) IDA curves from analysis

Figure 5: QED methodology

Assuming a firm soil site in Wellington, New Zealand (a high seismic zone) three levels of seismic demand were identified. These demand levels were: (i) a 90th percentile *design basis earthquake* (DBE); (ii) a 50th percentile *maximum considered earthquake* (MCE); and (iii) a 90th percentile MCE. The DBE and MCE were defined as an earthquake with a return period of 475 years (10% in 50 years) and 2475 years (2% in 50 years), respectively. For the site of interest, this corresponds to a *peak ground acceleration* (PGA) of approximately 0.4g and 0.8g for the DBE and MCE, respectively, based on the seismic hazard model presented in Stirling *et al.* (2002). Given these levels of demand, several performance objectives can be defined. Following current trends, each level was related to serviceability and life-safety. For the 90th percentile DBE, this corresponded to a high probability that the structure would remain operational following an earthquake of that intensity. After the MCE it would be expected the structure is repairable with a moderate probability (50th percentile MCE) and a high probability that the structure would not collapse (90th percentile MCE).

Due to the lack of large earthquakes in the Wellington region over the past 100 years, despite its known large seismicity, there are insufficient regional ground motion records to carry out a performance-based assessment. Therefore ground motion records were selected from a suite of 20 bi-direction ground motion records used in the SAC steel project (SAC, 1995), representing both near-source and medium-source distance accelerograms. Following current practice, the spectral acceleration (S_a) at the fundamental period of the structure was selected as the *intensity measure*

(IM). Thus, from the Stirling et al (2002) hazard model the S_a at the DBE and MCE intensity levels were 0.27g and 0.48g, respectively. The resulting IDA data is plotted in Figure 5a, showing the 10th, 50th, and 90th percentile fractal curves. The three selected records are noted in the figure. These records corresponded to peak (radial) interstorey drifts of 1.6, 1.6 and 2.8 percent for the 90% DBE, 50% MCE, and the 90% MCE, respectively.

5. EXPERIMENTAL RESULTS

Although the experiments were conducted using concurrent bi-directional earthquake motions, for the sake of brevity, this section will focus on the results of the QED tests in the EW direction—this is where the major drift levels were observed. Results from QED testing for the EW direction are presented in Figure 6. These plots show the force-displacement response, the bi-directional orbit of the column, and the displacement profile versus time. In all cases, the specimen exhibited good hysteretic response, showing a flag-shaped hysteresis loop with good energy dissipation. The response in the NS direction was not as stable as in the EW direction. This was especially the case for the 50 percent MCE. In this case, the specimen exhibited some stiffness degradation, possibly as a result of bi-directional rocking coupled with non-uniform displacement cycles. Damage to the specimen was minimal. Throughout all tests, only a few slight cracks near the joint region were observed. These cracks generally tended to close entirely when the applied drift was passing through zero and also at the end of testing.

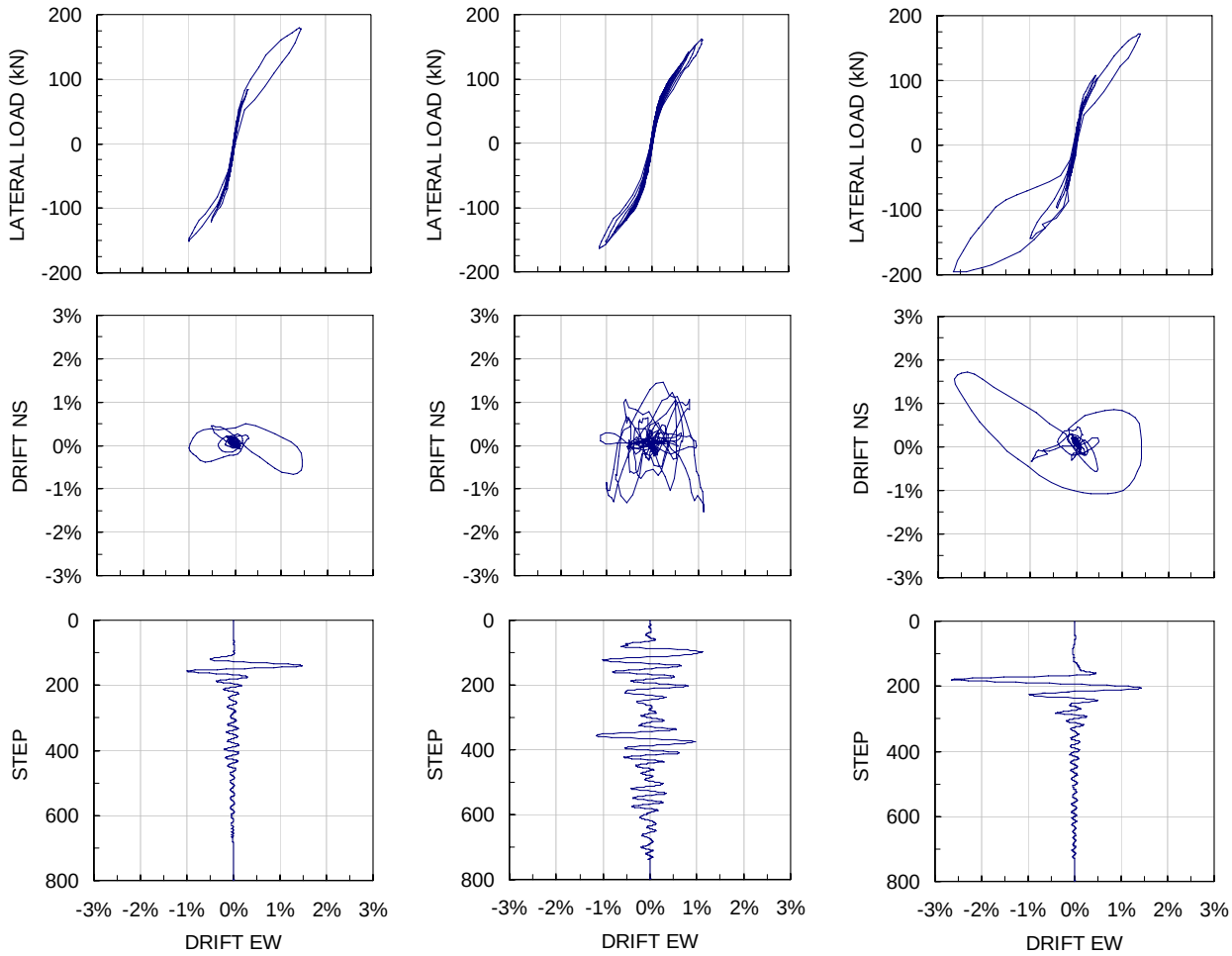

(a) 90% DBE (b) 50% MCE (c) 90% MCE

Figure 6: Results from QED testing in the EW direction

Some prestress loss was detected. This was generally in the order of 0-15kN, and may be ascribed to the "bedding-in" of the thread-bar anchorages.

The LE dampers performed very well, especially at higher drift levels. As apparent from Figure 6b, at low drift levels the dampers did not engage and the response was elastic. This can be attributed to some elasticity and minor thread-slop in the connecting elements, delaying full engagement of the devices. Clearly, most hysteretic energy dissipation was observed in the final test (Figure 6c). Upon unloading after this test the compression force in the LE dampers remained at about 200kN. Over several hours, this force reduced by about 50 percent with further reduction over time following logarithmic decay, thus validating the 'resetable' nature of the device.

The first performance objective dealt with serviceability. Given a design level earthquake, there must be a high confidence that the structure will not sustain damage which causes a disruption to its normal function. The displacement profile (Figure 6a) consisted mainly of a single large displacement cycle to an interstory drift of 1.6 percent, followed by a slow reduction in displacement. Residual drift was negligible. Observed damage from this level of shaking was minimal. Flexural cracks were observed in the beams and small (50mm) cracks were observed in the beam's joint region. These cracks closed after testing. The LE dampers performed well, with some hysteretic energy dissipation on the first pulse, followed by near-elastic behaviour. The specimen did not suffer any stiffness or strength degradation. Given these results, the specimen satisfied the first requirement of the MSPA.

The second performance objective relates to repairability. In this case, one must be moderately confident the structure is repairable following a very rare earthquake. The displacement demand (Figure 6b) was most severe in the NS (gravity) direction, corresponding to a maximum interstory drift of 1.6 percent. Again, the specimen performed very well. Only a few additional cracks near the armoured beam-ends armouring were observed. In the EW direction, the specimen behaved elastically, with no stiffness or strength degradation. In the NS direction, some minimal stiffness degradation was observed. This was attributed to the draped thread-bar profile which would bind within the duct. Nevertheless, this effect was minimal and did not affect subsequent performance. Therefore the specimen met the second requirement of the MSPA.

The third and final performance objective related to life-safety and collapse prevention. In a maximum considered event there must be a high level of confidence the structure must not collapse following a very rare earthquake. The displacement of the structure (Figure 6c) consisted of one primary pulse to a 2.8 percent interstorey drift, followed by several small displacement cycles. As with the previous two earthquakes, damage to the specimen was minimal. Some of the previously developed cracks propagated away from the joint approximately another 100mm. A few additional cracks formed behind the armoured beam-end region. Most of these cracks closed following testing. During the first pulse, a considerable amount of hysteretic energy dissipation was observed. It should be emphasised that this was <u>not</u> from the structural elements, but primarily from the LE dampers. Subsequent displacement cycles were elastic, with the full stiffness and strength of the specimen preserved. Some prestress losses were recorded, in the order of 0 to 5 percent, likely caused by "bedding-in" at in the anchorage regions. These losses were deemed too small to necessitate re-stressing the thread-bars. Given the damage outcome from this level of demand, the structure easily satisfied the final objective of life-safety and collapse prevention.

6. DISCUSSION

The experimental-based MSPA investigation has verified that the specimen performance, and indirectly the frame of a DAD structural system, is capable of remaining essentially damage-free given severe ground shaking. All performance objectives related to serviceability and life-safety were achieved. This structure, designed to resist damage by rocking at specially detailed joints,

offers an attractive alternative to conventional monolithic design and construction. An equivalent monolithic structure would have likely undergone cyclic rotations at its plastic hinges, resulting in damage locally and residual displacement of the global system. The MSPA method relies heavily on the analytical model developed in conjunction with the experimental specimen. In order for realistic displacement profiles to be extracted from the model, the response of the two must be reasonably identical. Furthermore, non-structural damage, which constitutes a large portion of overall damage, should be considered for a more complete conclusion to be drawn. Nevertheless, the MSPA method has demonstrated a sound means of experimentally verifying the performance of structures at various levels of seismic demand.

7. CONCLUSIONS

Based on the findings of this research the following conclusions are drawn:

1. The specimen satisfied all performance objectives related to serviceability, life-safety and collapse-prevention. After being subject to displacement paths representing a design level earthquake and more severe rare earthquakes, the specimen remained essentially damage-free, thus validating the DAD philosophy.

2. The lead-extrusion damper was able to provide a reliable form of energy dissipation to the specimen. Residual compression forces in the devices at the end of testing were shown to creep back towards zero, with half the force being lost over the first few hours. Therefore, the devices would not have to be replaced following an earthquake.

3. Precast concrete framed structures constructed in accordance with the principles of Damage Avoidance Design (DAD) now appears to be a viable alternative to the conventional monolithic construction of concrete structures that posses ductile details. The next step is to investigate detailing methods of mitigating damage to the floor system within such DAD frames.

References:

Amaris A, Pampanin S, Palermo A. 2006. Uni and bi-directional quasi-static tests on alternative hybrid precast beam column joint subassemblies. *Proceedings of the 2006 New Zealand Society for Earthquake Engineering* (NZSEE) *Conference*. Napier, New Zealand, Paper #24.

Bradley, B.A. Dhakal, R.P. Mander, J.B. 2006 Dependency of current Incremental Dynamic Analysis to source mechanisms of selected records. *19th Biennial Conference on the Mechanics of Structures and Materials*; Christchurch, NZ.

Cousins WJ and Porritt T E. 1993, Improvements to lead-extrusion damper technology. *Bulletin of the New Zealand National Society for Earthquake Engineering*; **26**:342-348.

Dhakal, R.P. Mander, J.B. Mashiko, N. 2006. Identification of Critical Earthquakes for Seismic Performance Assessment of Structures, *Earthquake Engineering and Structural Dynamics*; **35**(8):989-1008.

Dutta. A, Mander JB, Kokorina. T. 1999. Retrofit for Control and Repairability of Damage. *Earthquake Spectra* **15**(4), pp. 657-679.

Mander, J.B. and Cheng, C.-T. 1997 Seismic resistance of bridges based on Damage Avoidance Design", NCEER, Technical Report NCEER-97-0014, Buffalo USA.

Priestley MJN, Sritharan S, Conley JR, Pampanin S. 1999. Preliminary Results and Conclusions from the PRESSS Five-Storey Precast Concrete Test Building. *PCI Journal*, **44(**6):43-67.

Stanton JF, Stone WC, and Cheok GS. 1997. A Hybrid Reinforced Precast Frame for Seismic Regions. *PCI Journal*, **42**:20-32.

Stirling M.W., McVerry G.H., Berryman K.R., 2002, A New Seismic Hazard Model for New Zealand, *Bulletin of the Seismological Society of America*. *92*(5) pp 1878-1903.

Vamvatsikos, D. and Cornell, C.A. 2002. Incremental Dynamic Analysis. *Earthquake Engineering and Structural Dynamics*; **31**:491–514.